Submission

No 1

INQUIRY INTO THE ECONOMICS OF ENERGY GENERATION

Organisation: Docklands Science Park Pty. Ltd.

Name: Mr John Martin

Date Received: 12/01/2012

ATTENTION:VICKI BUCHBACK;

Dear Vicki,

We are pleased to attach two versions of a presentation on the PUTAR system.
The first “20110809 – APSEET – pres 16” is a Power Point presentation with Read me first notes, also attached.
The second “APCSEET2011 – Proctor – paper 2” is a written version with bibliography.

Dr. David Proctor is the lead author and could possibly appear before your Committee and explain the system, making it fully understandable and that may be worthwhile. It can all be done in public as the material is subject to patent application which applications are now public.

Docklands Science Park has developed methodology to produce 5.19 MWh of power from each tonne of Latrobe Valley brown coal. See the attached.

You can select from no emissions, or 0.583 tonnes of CO2e per MWh, as you wish.

The steps would be a 5 tonne per day liquefaction plant which gasifies the coal, produces the power and liquefies the greenhouse gases, so proving the latest technology mix, cost some $12 M after which a full sized unit (200 tonnes per day) can be built and they are modular, select the number for the MW involved.
All dangerous emissions can be collected, including mercury, sulphur, NOx, etc. I
Largely, it is a matter of the temperature at which they condense.

Herein, we show how power costs can be reduced, either with carbon capture and sequestration, an even greater reduction in costs if CCS is not to be required. Not our decision.

The first paper, attached, is to be published in “Energy and Fuels” and we must state that in circulating it to be correct.

In the PUTAR system the following benefits, inter alia, can be derived:-

1. Ignoring the capture and sequestration of greenhouse gases the price of electricity can be lowered by at least one third.

2. The system can run on coal or natural gas, coal is cheapest, syngas can be produced for approximately one fifth of the price of natural gas. In the Latrobe Valley of Victoria that is $0.77 per gigajoule (GJ), versus some $3.50 per GJ from Bass Strait natural gas. The price of natural gas is rising due to demand for energy. Gippsland brown coal produces excellent syngas, due to the high water content in the coal. Some coals require water to be added to gain the extra hydrogen. Because the power generation is running on syngas it can be throttled up and down in accordance with demand.

3. Building the power station is no more expensive than a conventional power station and money should be saved per MW of capacity.

4. PUTAR does not need cooling water, the cold gases suffice. Some “distilled” water is produced.

5. If the greenhouse gases are captured and sequestrated then the cost of the electricity should still be 10% lower than current rates after allowing for the capture and sequestration costs.

6. Land area required for the PUTAR plant is no more than 10% greater than “normal”.

7. Pulse combustion is extremely efficient and is an essential component of the PUTAR system, providing the heat which generates the sine waves. A photo of a 0.5 MW pulse combustion boiler is shown as Fig. 5., in the second attached paper. It is modular, so no trouble to produce 1.0 MW, etc. See photo of a 2.0 MW pulse combustor at night, attached.

8. Gasification of the coal is an important part of the PUTAR system and acoustic resonance is involved. Sizing can be adjusted to the task.

9. Pulse combustion requires the fuel particles to be one third of a millimetre, or less, to obey the Brownian Laws of Motion. So almost all common fuels can be burnt in the same combustor. This includes reasonably raw state biofuels, including biodiesels and this can be a large saving. Powdered coal can be transported to remote areas to provide electricity or motive power. Properly selected the powdered coal is unlikely to spontaneously ignite.

10. The liquefied greenhouse gases from a power plant can be piped out to 3,000 metres depth and under the subsea silts, where they will stay entombed effectively forever. See "Nat. Academy CO2 Storage", attached.

We would be pleased to discuss any of the above technology, or use of it, at your convenience.

All the best,

John Martin,
Docklands Science Park.
[redacted]
Website: www.docscipark.com.au

How To Remove CO2, NOx and SOx From Flue Gases & Make A Profit or (How to have your cake and eat it!)

David Proctor, John Martin & Matthew Fox

Australian Greenhouse Gas Emissions per quantity

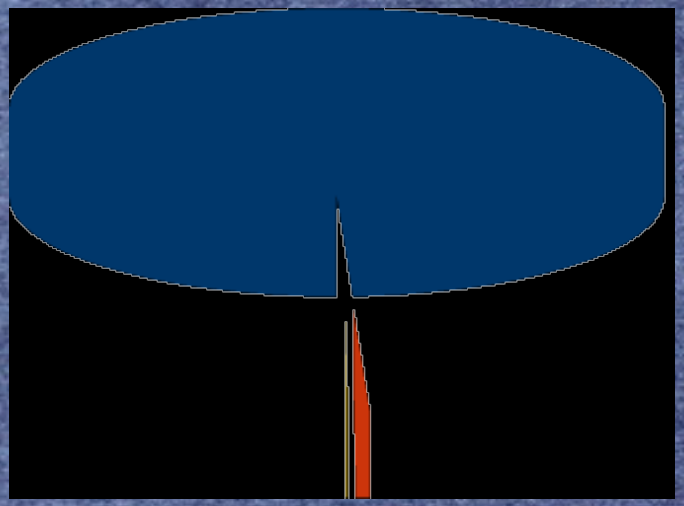

CO2

CH4

N2O

Australian Greenhouse Gas Emissions per CO2 equivalent effect

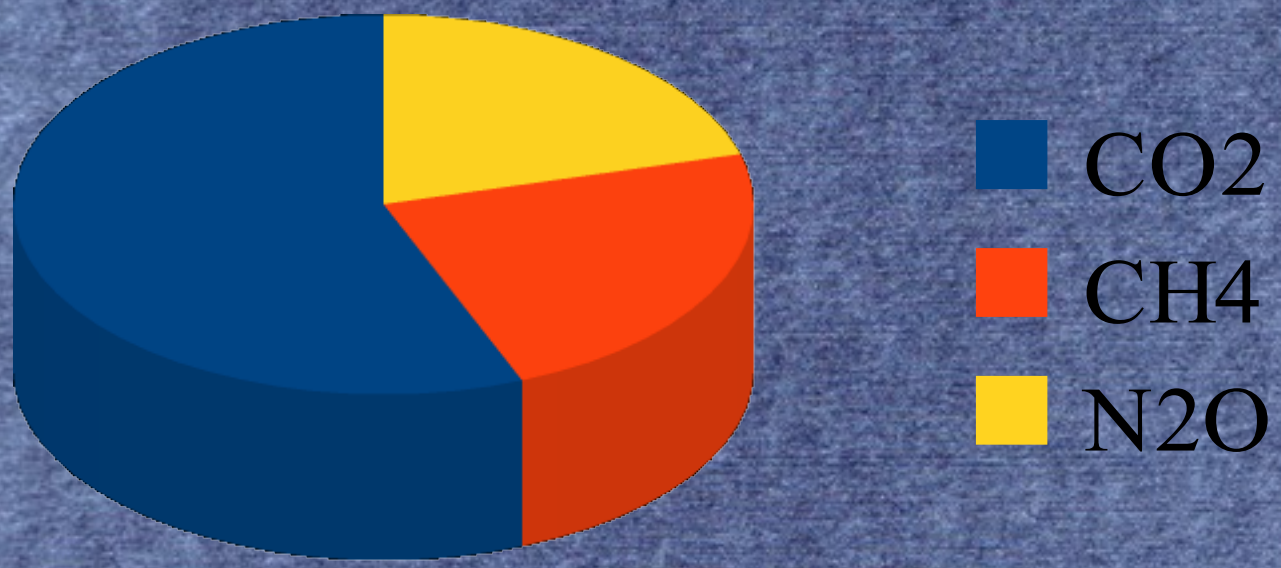

CO_{2e} Emission by sector

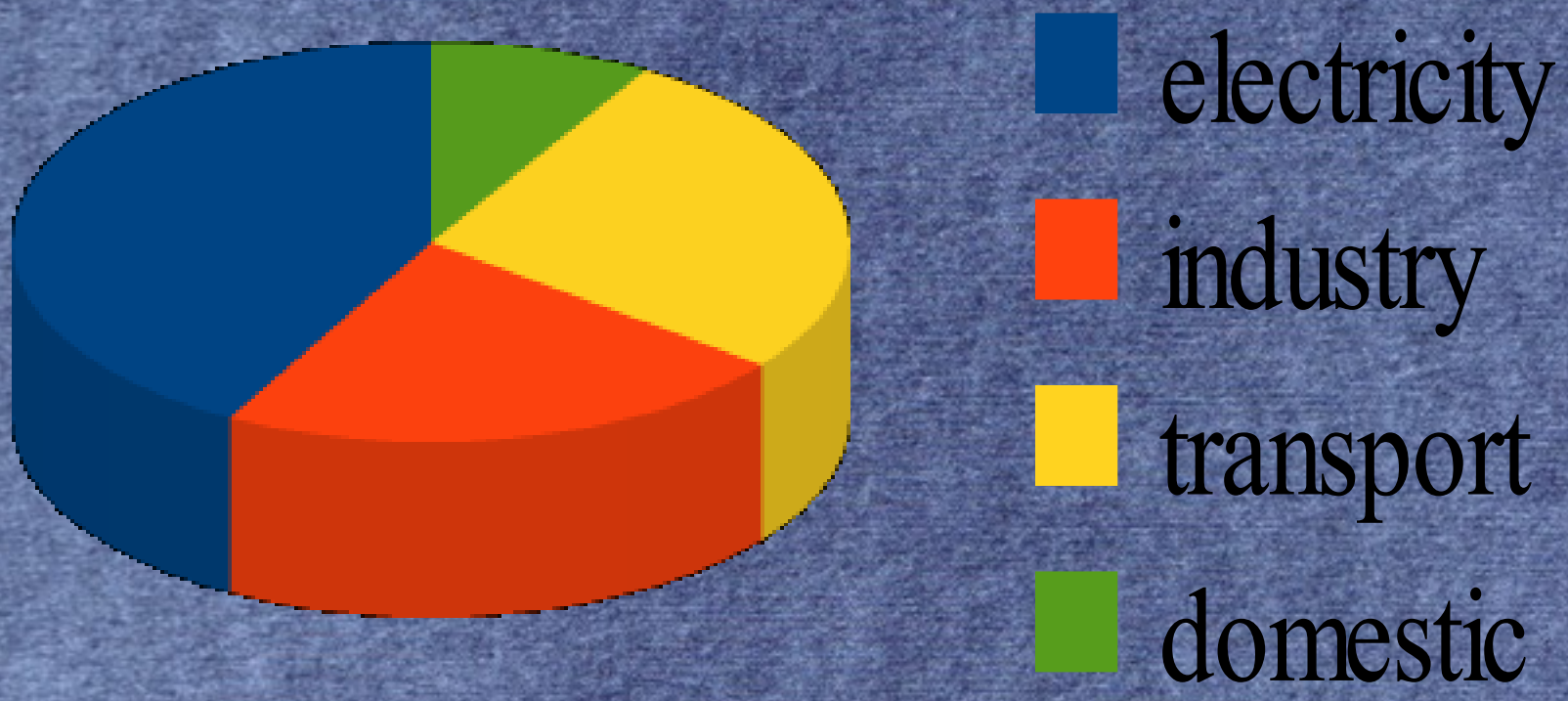

CO_{2e} Emission by sector

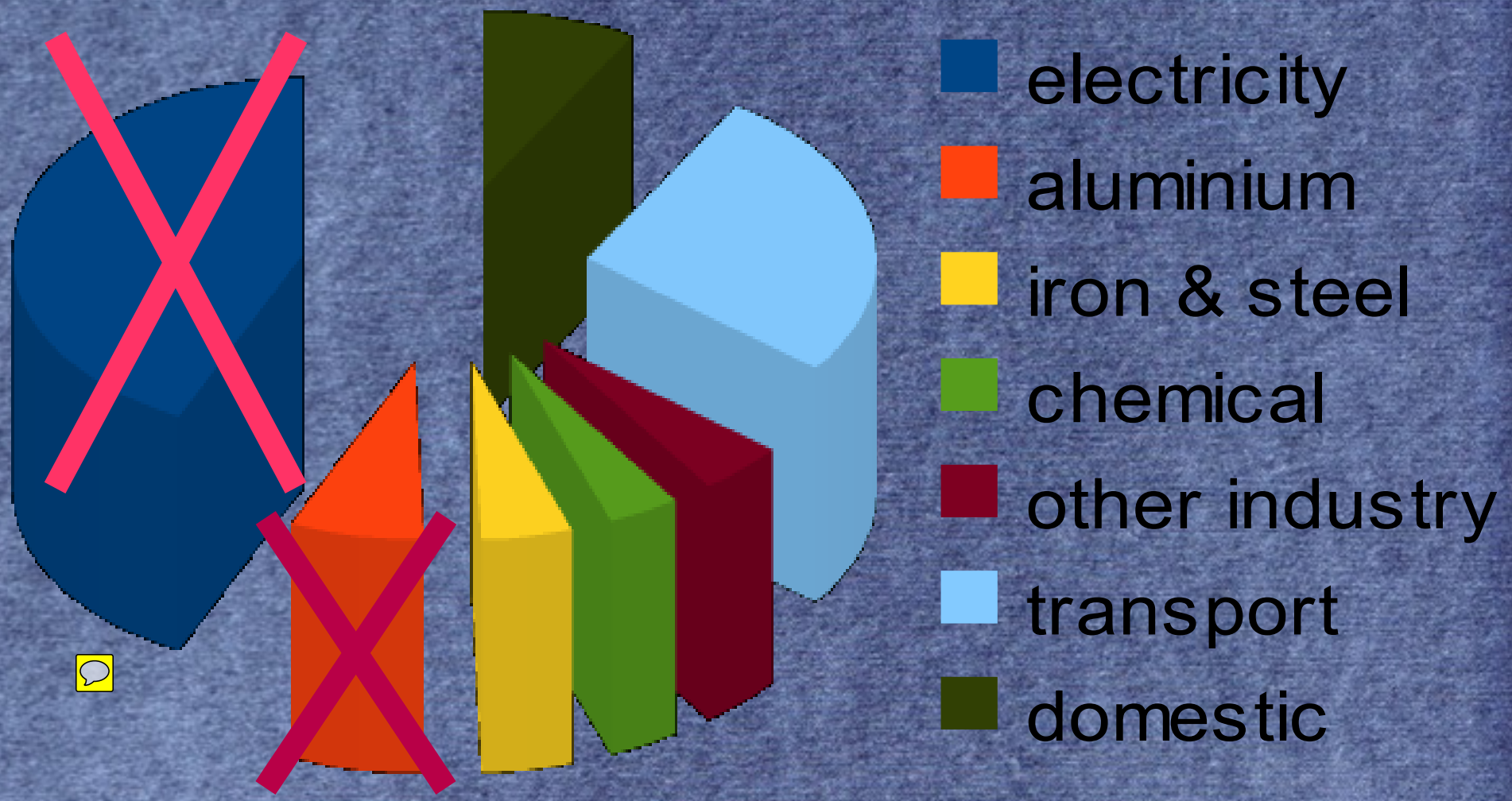

Possible CO_2 Removal Routes

• Amine scrubbing of the flue gas	85%
• Oxy-firing of the boiler	85%
• Feeding the flue gases to growing algae	50%
• Carbon adsorption filters	90%
• Chemical looping	~97%
• Condensing out gases from the flue gases	100%+

Why Do It Differently?

Comparison of REFRIGERATION and AMINE Capture		
ITEM	REFRIGERATION	AMINE CAPTURE
Area occupied per MW	0.6 sq.m./MW	47.8 sq. m/MW
Cost, as % of power station cost	6%	80 - 100%
Cost of Capture per tonne	$3-8 for all greenhouse gases, NOx & SOx	$80 for 85% of CO_2 only NO_x or SOx captured by other plant
Escaping gases	NIL	15% of CO_2, NOx and SOx escape plus amines
Water usage	NIL	Adds at least 33% to existing power station usage
Electricity usage	Generates extra	About 20% or higher of total output
Sequestration	Liquefied gases go to sub-sea silts, or conversion plant	CO_2 requires liquefaction to efficiently transport it.
Utility, other uses of the system	Liquefy, refrigerate gases, space or object cooling or heating. -200°C achieved.	Unkown to us
Can run on solar heat source	Yes	partly

Current State

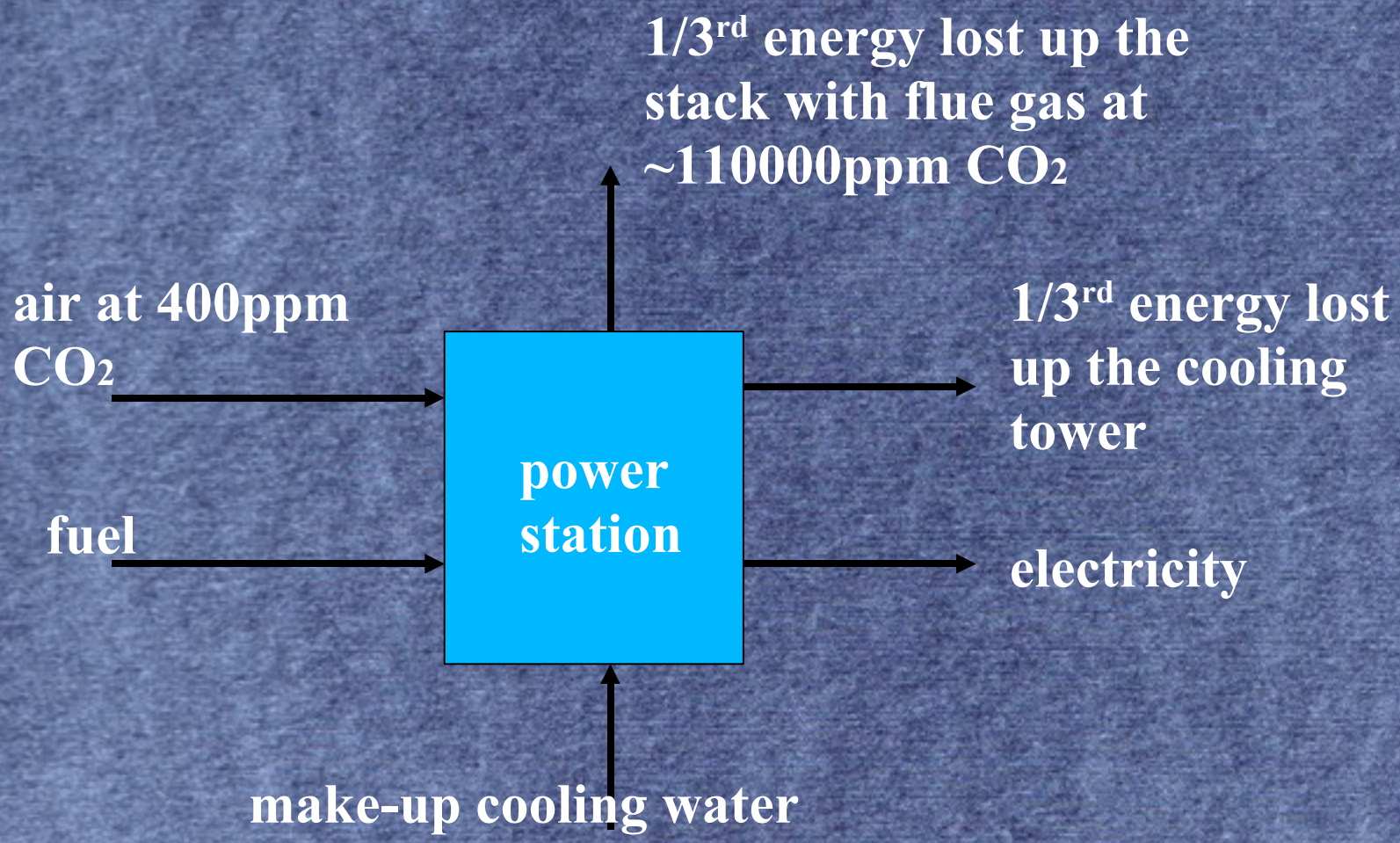

Future State

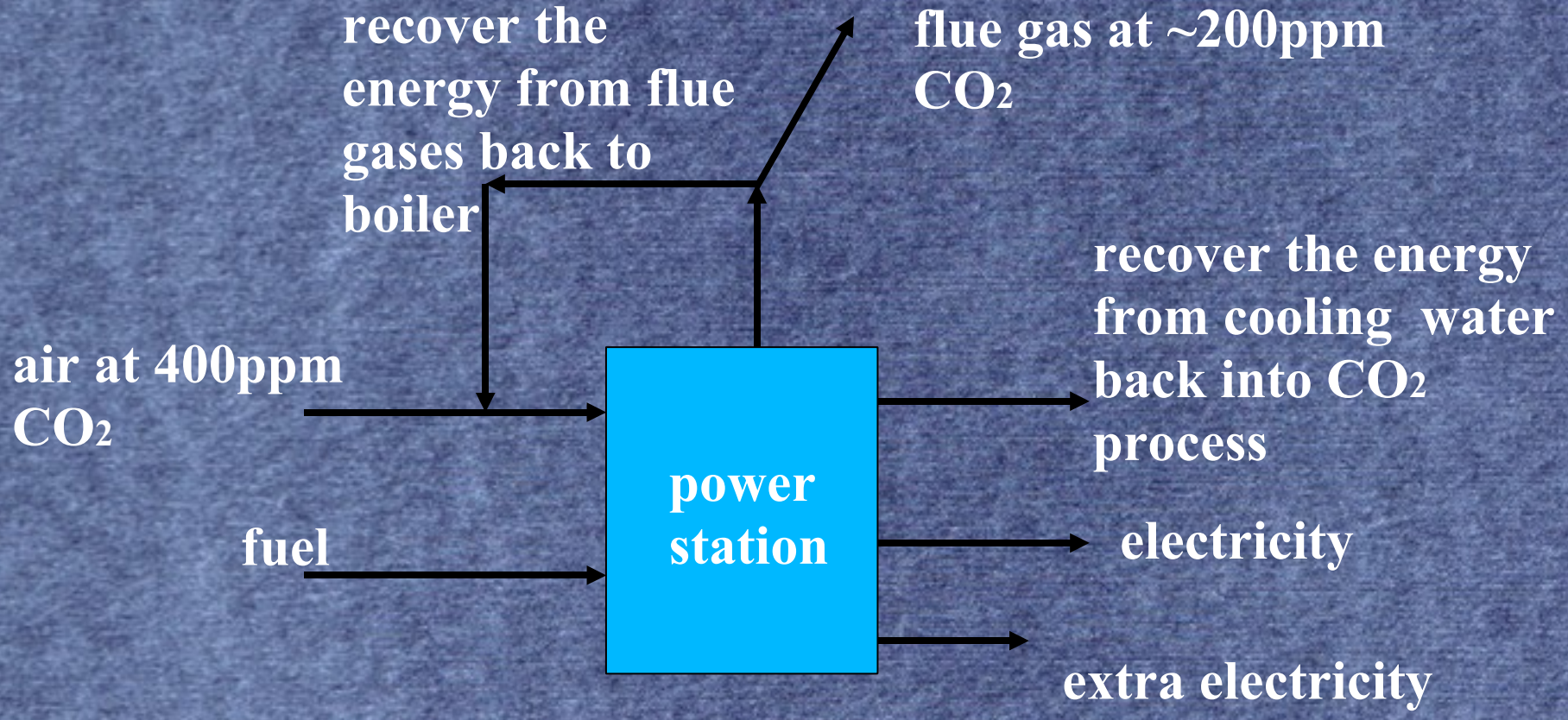

no make-up cooling water

Net Result

- Much more efficient boiler
- Much more efficient steam turbine
- Less or no make-up water required
- Less CO_2 in the atmosphere
- Zero emissions
- **The first 3 items pay for the CO_2 removal**

The Levelised Cost Of Electricity

1. Existing power stations $42/MWh

2. IGCC without no CO_2 capture.....$117/MWh

3. IGCC with amine CO_2 capture.....$192/MWh

4. PUTAR/ Coal gasifier $28/MWh

200t/day PUTAR Unit

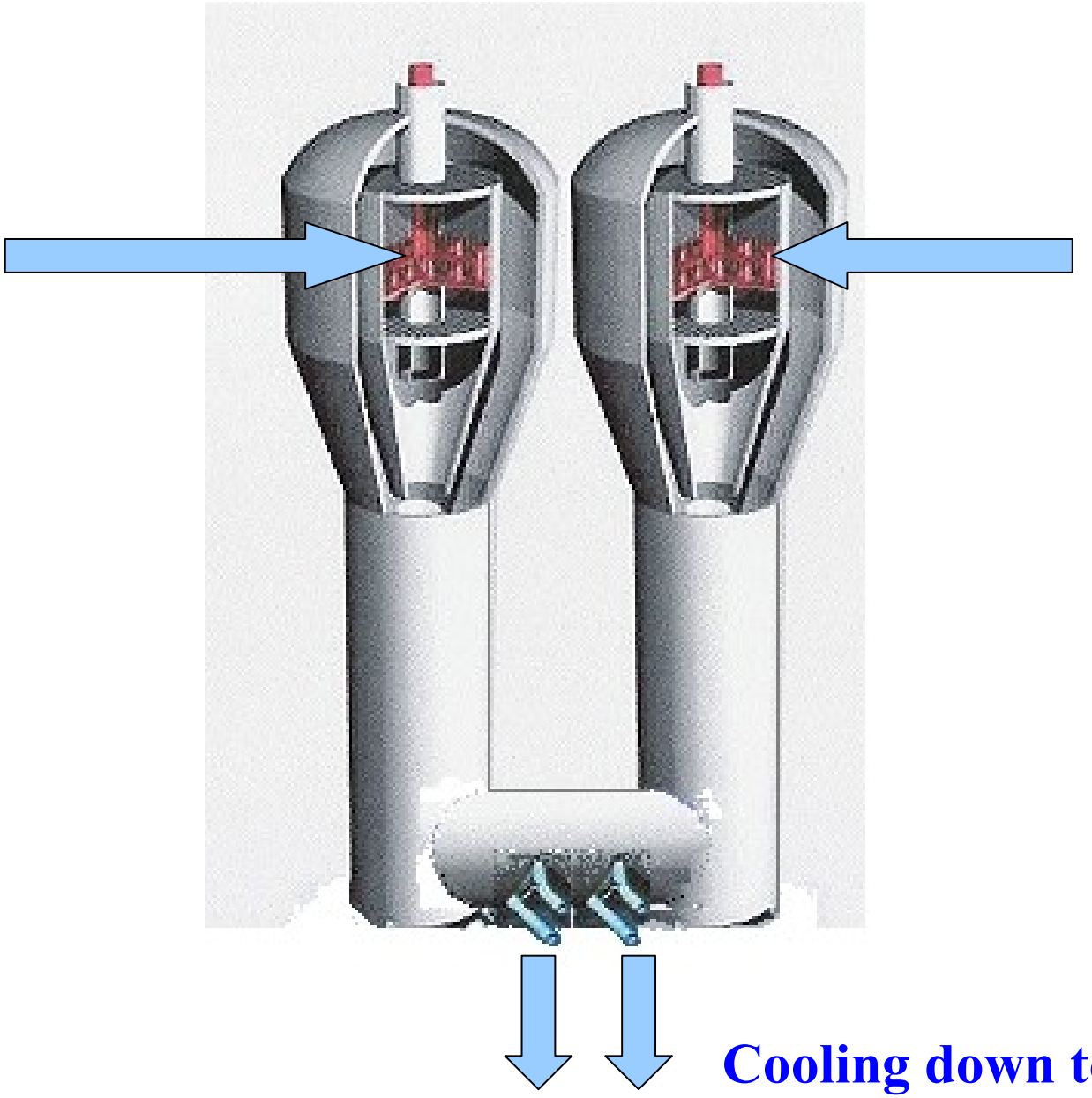

Apply heat here by pulse combustion heaters

Cooling down to -268°C

Profit & Loss Comparison

electricity generating system	Relative MWh	sell at	Profit/ MWh	profit/MWh with $23/t CO2 permit
existing brown coal	1.00			
existing with PUTAR CO2 capture	1.35			
existing with amine capture	0.70			
new pulse gasifier/PUTAR	2.60			
IGCC with amine capture	1.49			
IGCC with PUTAR capture	2.12			

Profit & Loss Comparison

electricity generating system	Relative MWh	sell at	Profit/ MWh	profit/MWh with $23/t CO2 permit
existing brown coal	1.00	$41.40		
existing with PUTAR CO2 capture	1.35	$55.89		
existing with amine capture	0.70	$28.98		
new pulse gasifier/PUTAR	2.60	$107.43		
IGCC with amine capture	1.49	$61.48		
IGCC with PUTAR capture	2.12	$87.56		

Profit & Loss Comparison

electricity generating system	Relative MWh	sell at	Profit/ MWh	profit/MWh with $23/t CO2 permit
existing brown coal	1.00	$41.40	$11.40	
existing with PUTAR CO2 capture	1.35	$55.89	$17.49	
existing with amine capture	0.70	$28.98	-$96.22	
new pulse gasifier/PUTAR	2.60	$107.43	$62.03	
IGCC with amine capture	1.49	$61.48	-$70.72	
IGCC with PUTAR capture	2.12	$87.56	$42.16	

Profit & Loss Comparison

electricity generating system	Relative MWh	sell at	Profit/ MWh	profit/MWh with $23/t CO2 permit
existing brown coal	1.00	$41.40	$11.40	-$20.80
existing with PUTAR CO2 capture	1.35	$55.89	$17.49	$17.51
existing with amine capture	0.70	$28.98	-$96.22	-$101.05
new pulse gasifier/PUTAR	2.60	$107.43	$62.03	$62.06
IGCC with amine capture	1.49	$61.48	-$70.72	-$75.55
IGCC with PUTAR capture	2.12	$87.56	$42.16	$42.18

ADVANCED POWER STATION

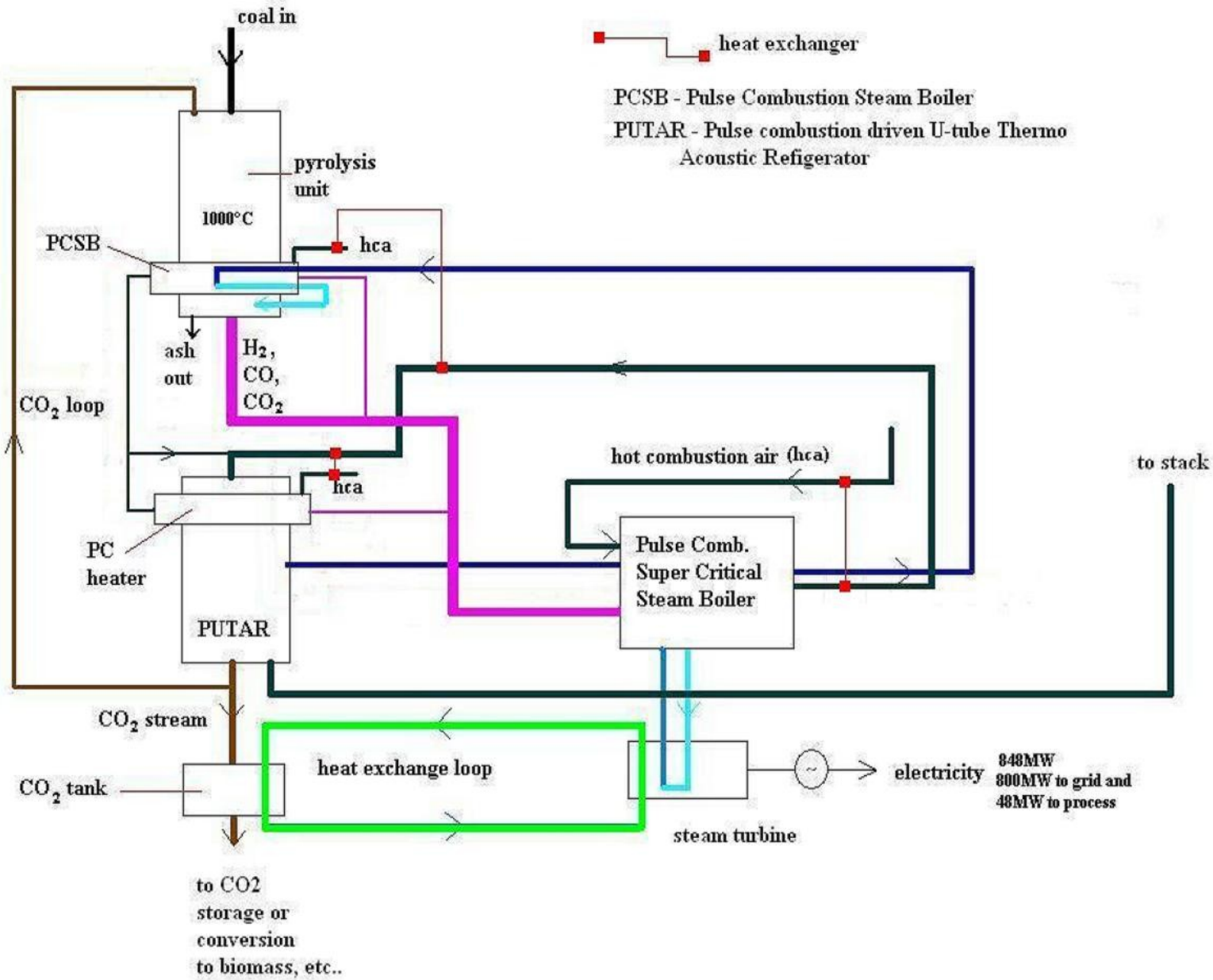

ADVANCED POWER STATION

There Are Three Parts To This System All Driven By Pulse Combustion

1 The Gasifier

2 The Putar

3 The Pulse Combustion Super Critical Boiler

ADVANCED POWER STATION

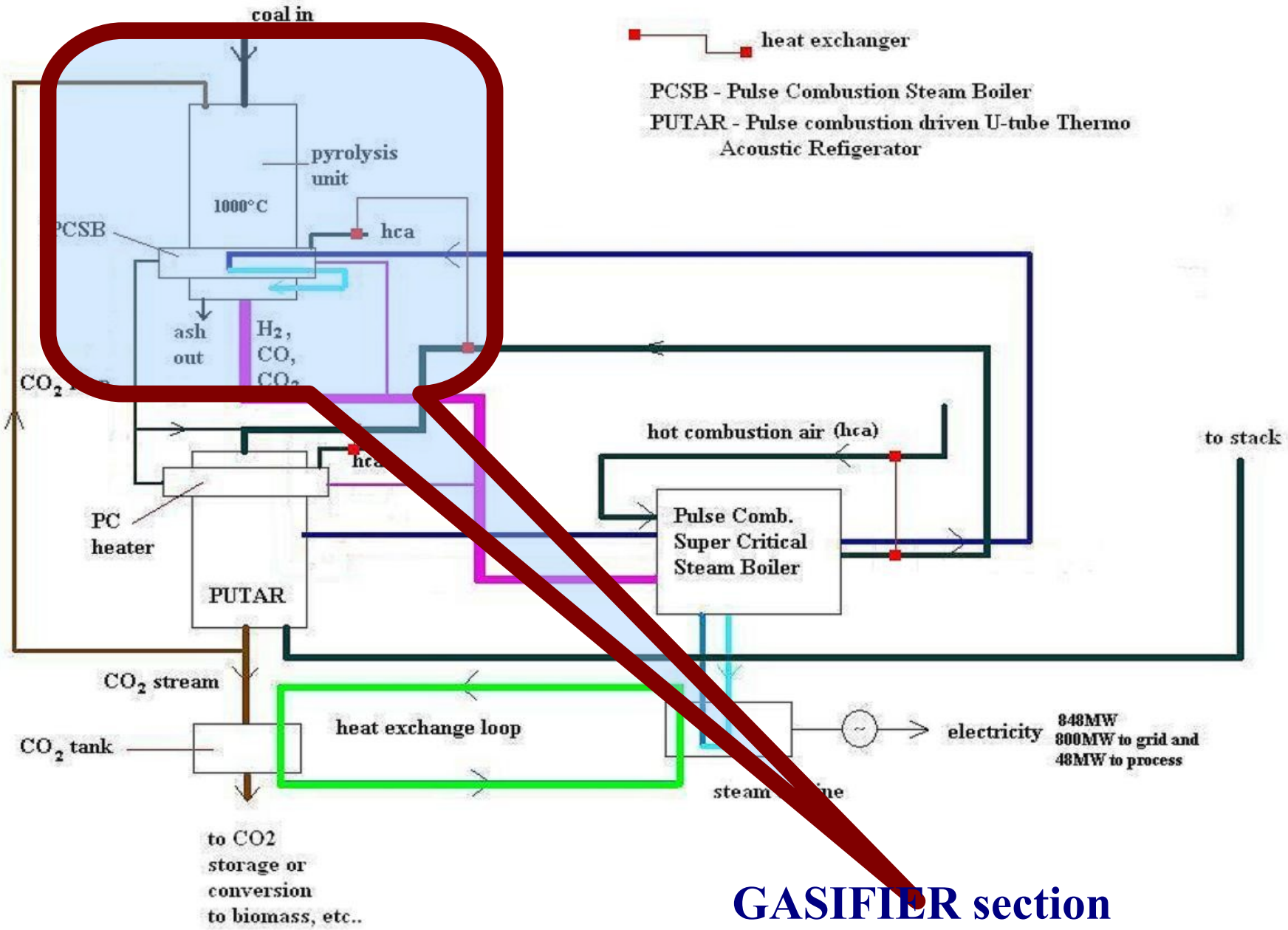

GASIFIER section

ADVANCED POWER STATION

Gasifier section

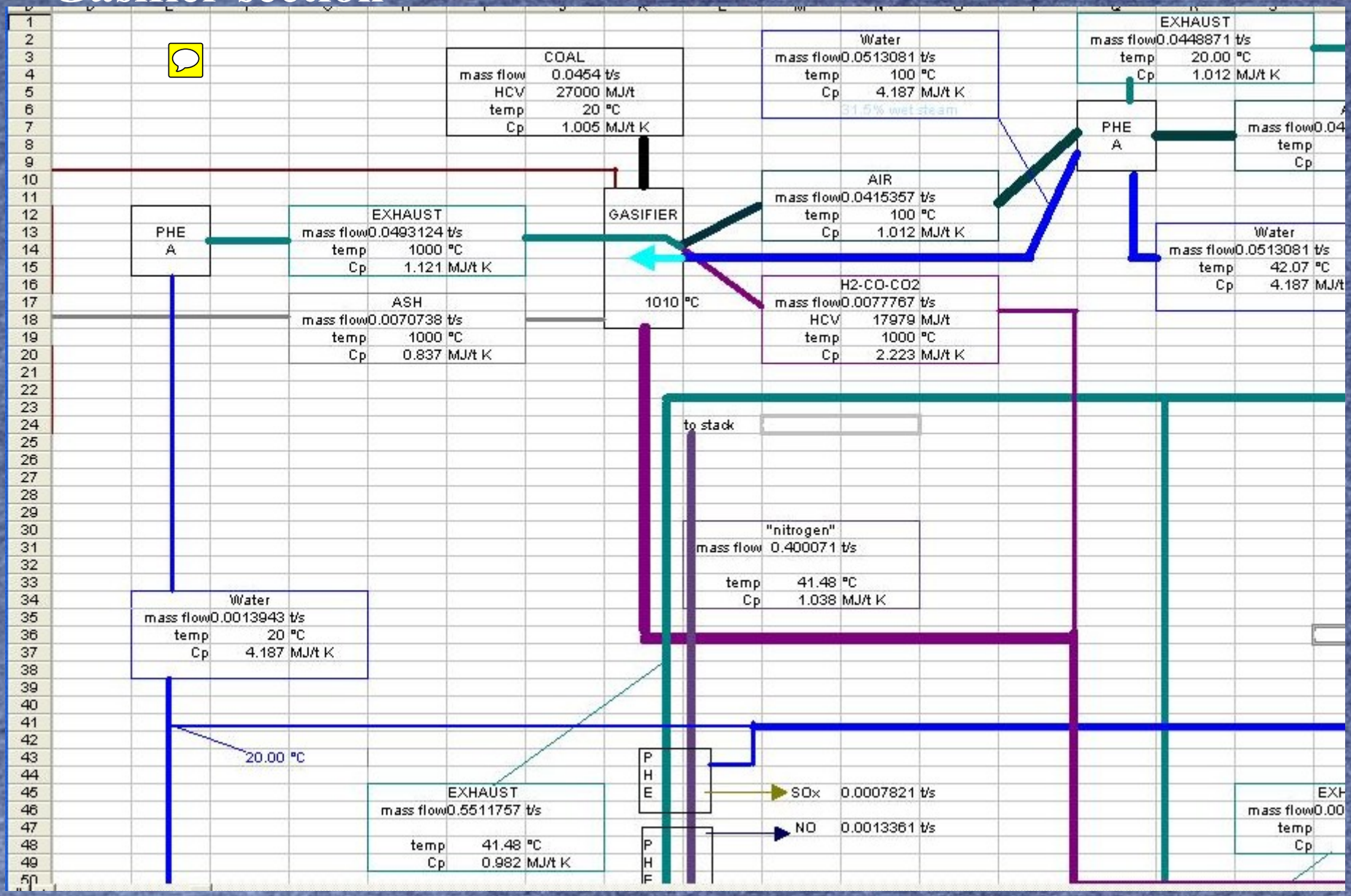

ADVANCED POWER STATION

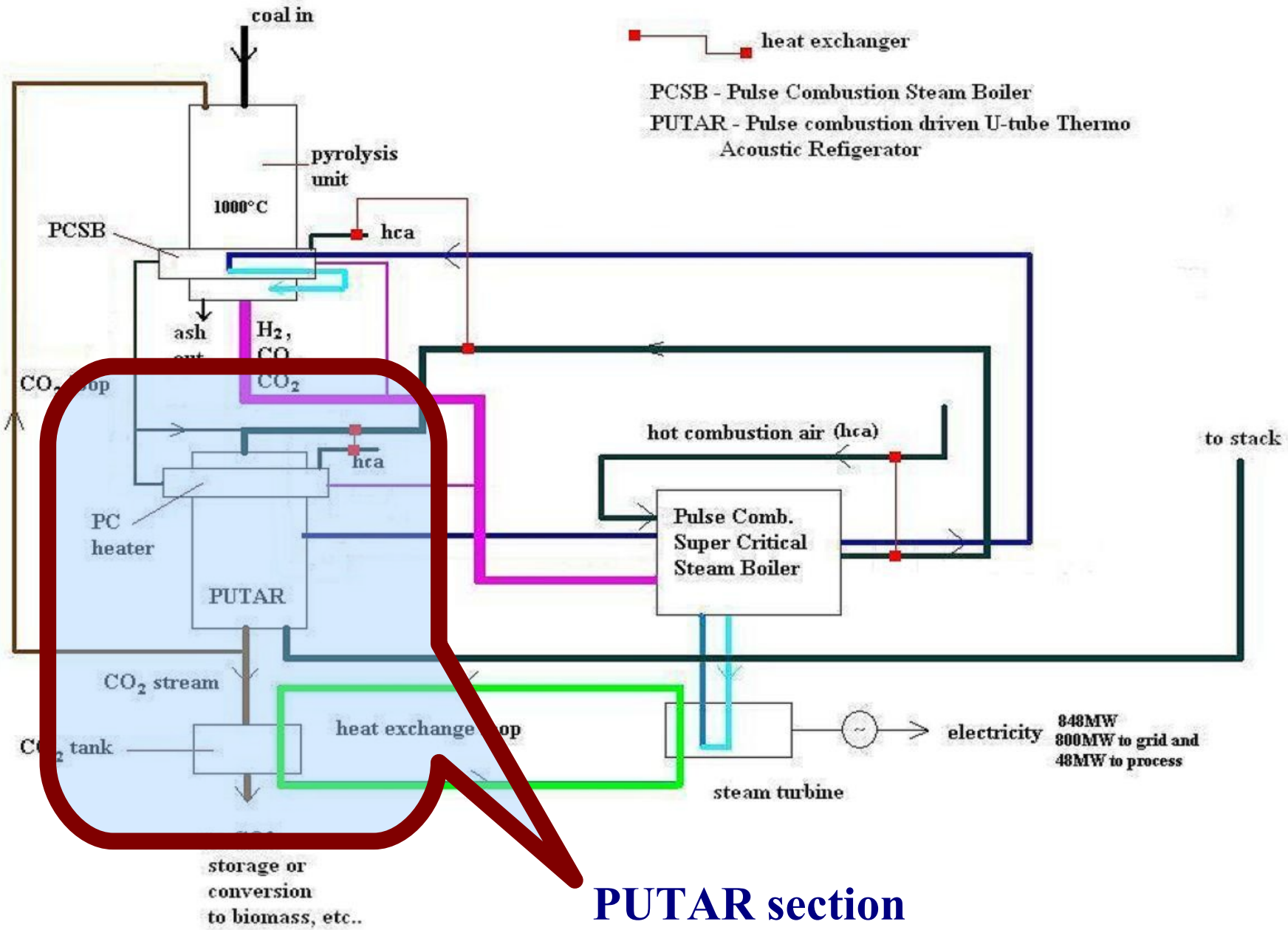

PUTAR section

ADVANCED POWER STATION

PUTAR section

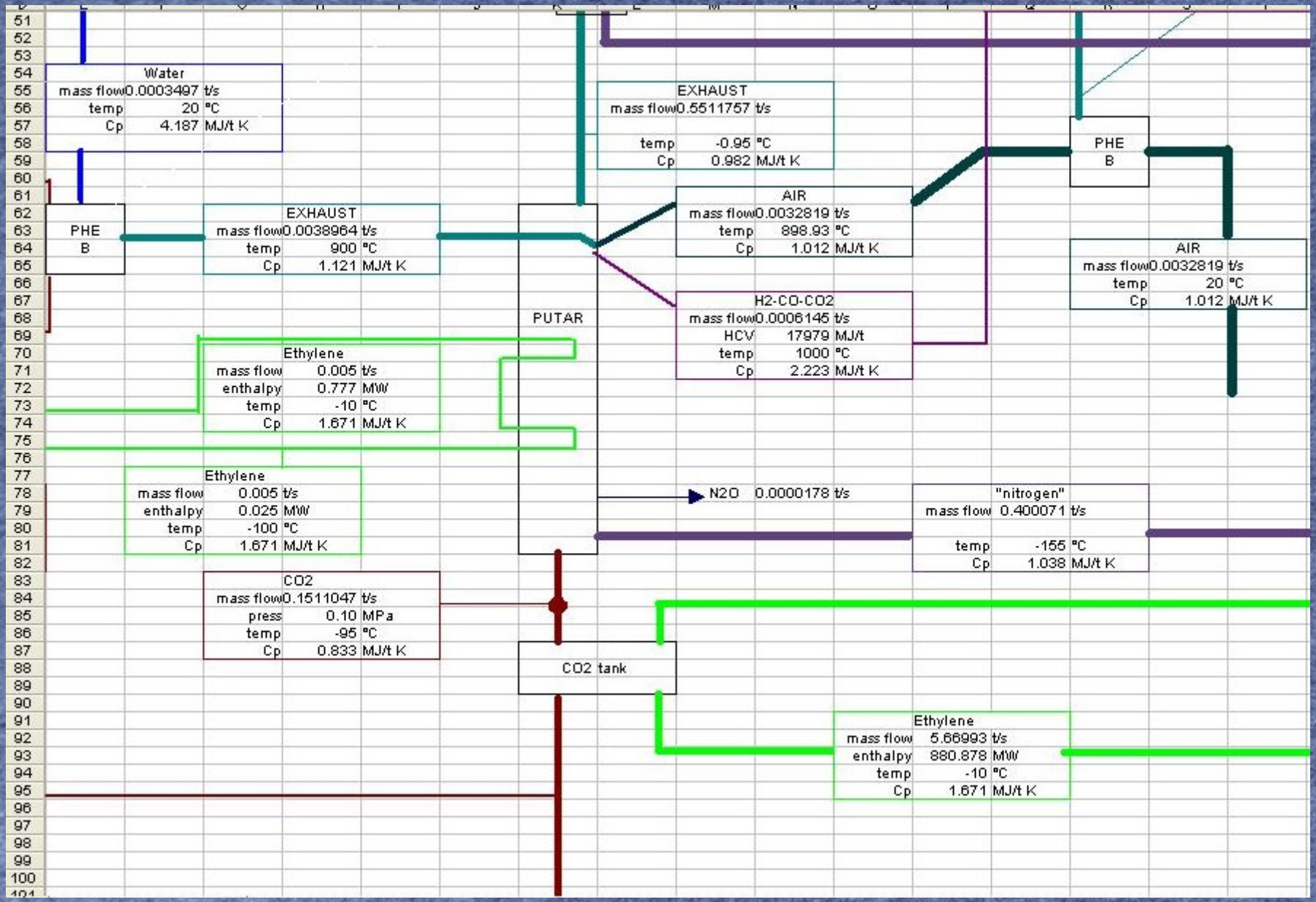

ADVANCED POWER STATION

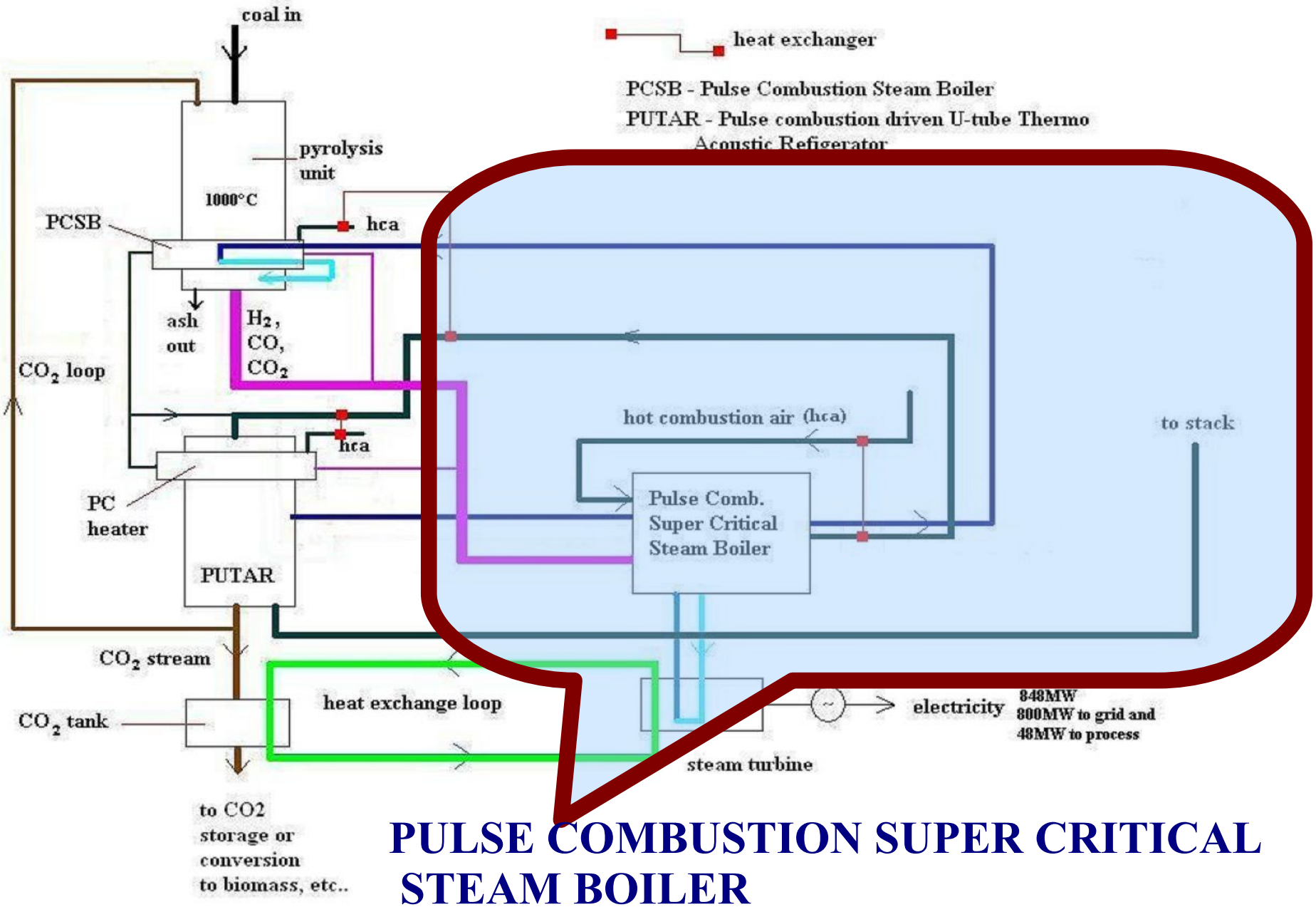

PULSE COMBUSTION SUPER CRITICAL STEAM BOILER

ADVANCED POWER STATION

Pulse Combustion Super Critical Boiler section

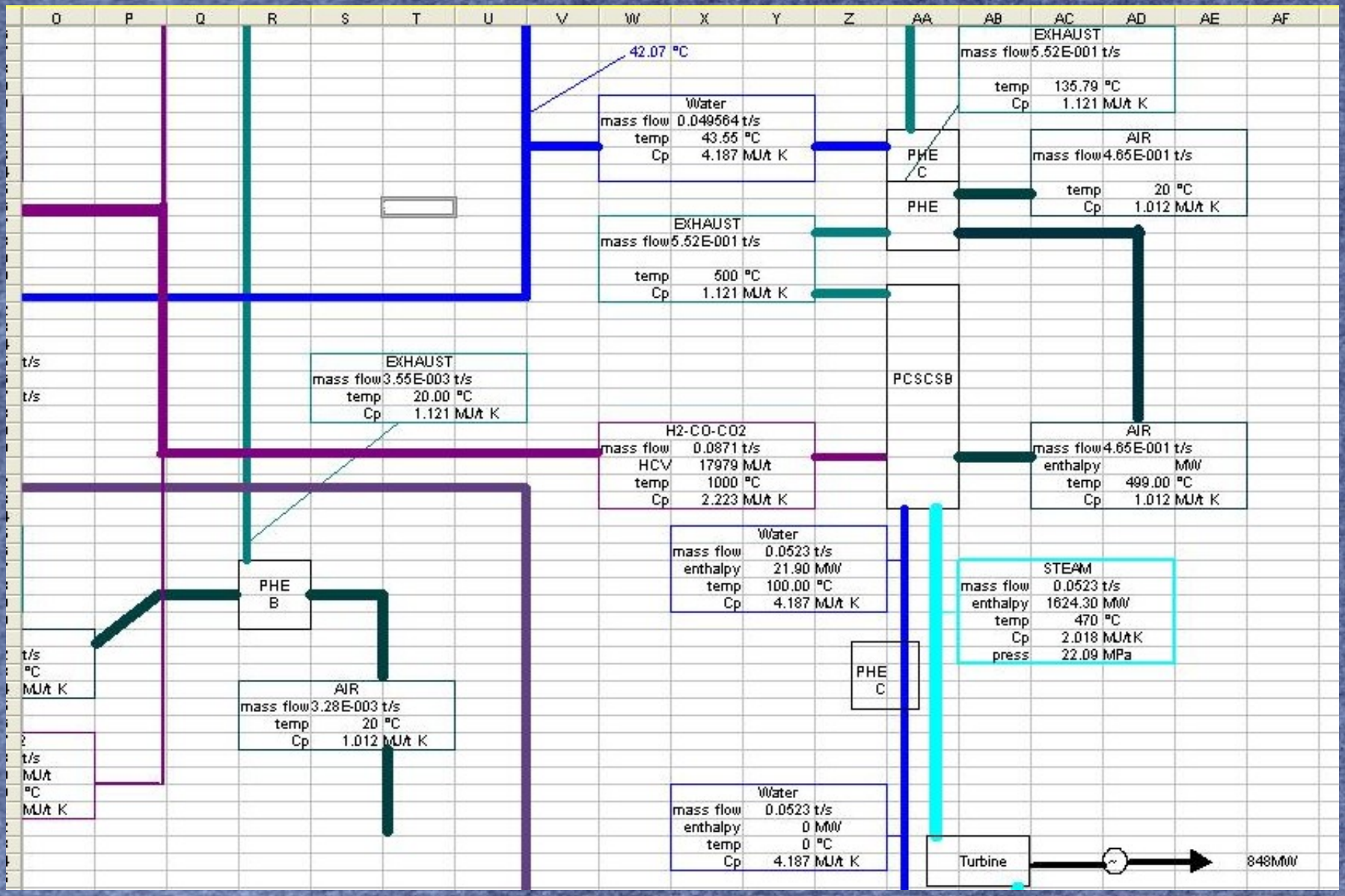

Parts of the system that have been made & operated

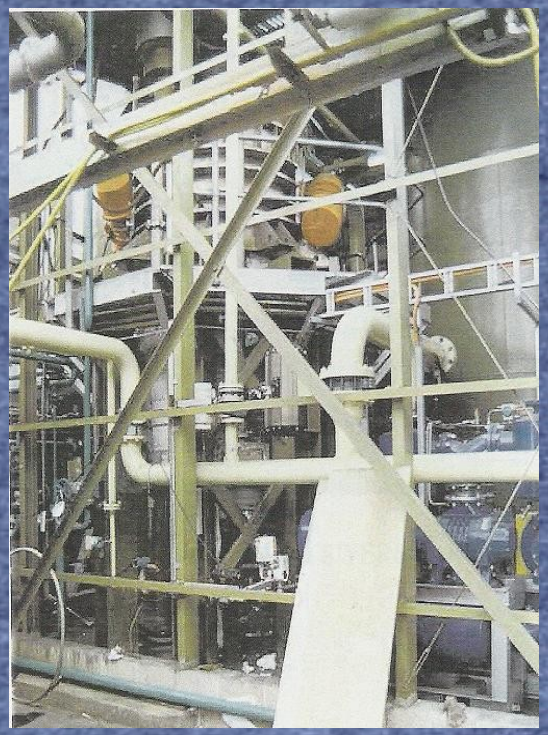

Pulse Combustion Gasifier

Pulse Comb. Boiler

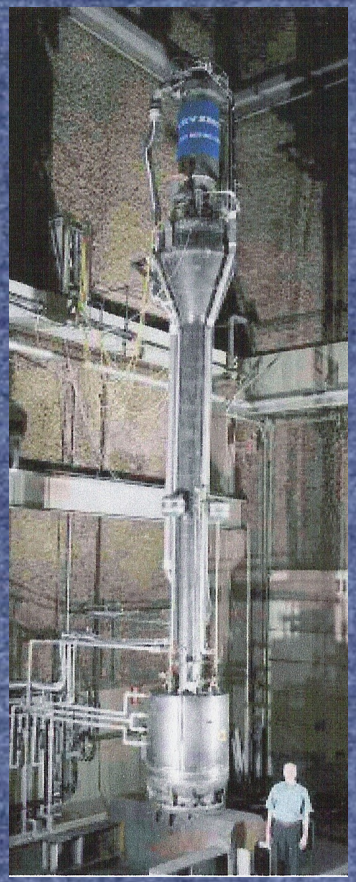

Thermo-Acoustic Refrigerator

What to do with the CO_2?

- Put in old oil wells or saline aquifers **>$10/t CO_2**
- Put it at the bottom of the ocean below 3000m under a membrane **~$10/t**
- Put it under the silts at the bottom of the ocean below 1000m and within a membrane **~$10/t**
- Lock it into some medium **~$20/t**
- Convert it into formic acid **$100/t** **$1440/t**
- Convert it into bio-fuel

  (via solar energy) **$70/t** **$230/t**

Profit & Loss Comparison

electricity generating system	Relative MWh	sell at	Profit/ MWh	profit/MWh with $23/t CO2 permit
existing brown coal	1.00	$41.40	$11.40	-$20.80
existing with PUTAR CO2 capture	1.35	$55.89	$17.49	$17.51
existing with amine capture	0.70	$28.98	-$96.22	-$101.05
new pulse gasifier/PUTAR	2.60	$107.43	$62.03	$62.06
IGCC with amine capture	1.49	$61.48	-$70.72	-$75.55
IGCC with PUTAR capture	2.12	$87.56	$42.16	$42.18

Our goals

- To have all existing and future power stations with this CO_2 removal system
- Initially the goal is to have the worst emitters in the La Trobe Valley operating with this system so that they end up as “GREEN” power stations
- Turn power stations into bio-fuel producers

- Can we make a profit from CO_2 capture?

YES WE CAN

What we could end up with:

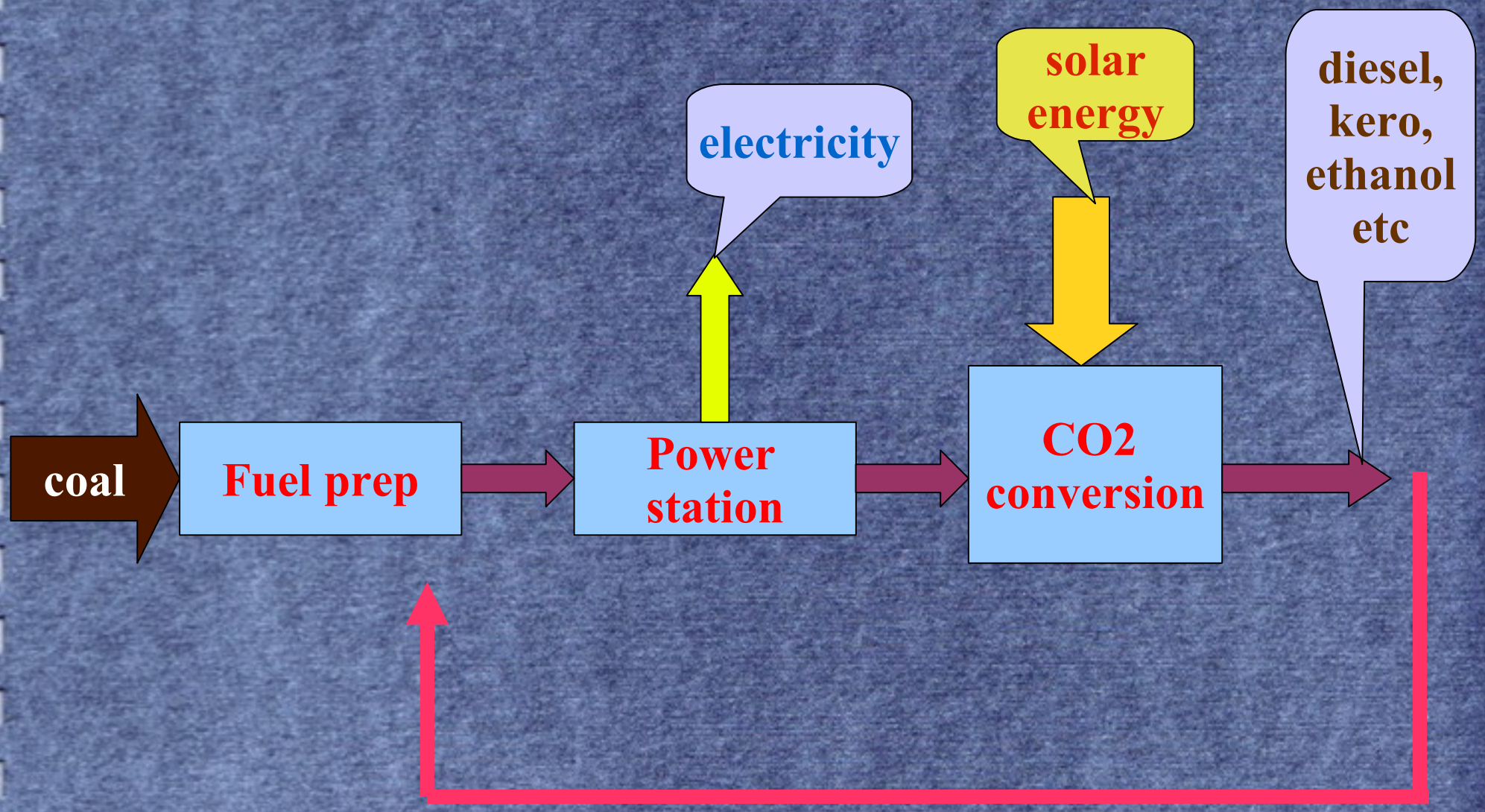

CONTACT DETAILS

David Proctor hpdp6@bigpond.com

John Martin jtm@docscipark.com.au

Matthew Fox matthew@delafield.com.au

How To Remove CO_2, NOx and SOx From Flue Gases and Make A Profit

David Proctor *
18 Kaleno View, Balwyn, VIC 3103
hpdp6@bigpond.com

John Martin
Docklands Science Park , Level 2/11 Queens Road, Melbourne VIC 3004
jtm@docscipark.com.au

Matthew Fox
Delafield Pty Ltd, 1 German Church Road, Carbrook, QLD 4130
matthew@delafield.com.au

Abstract

This paper address 10 of the topics listed for the APCSEET conference. What will be demonstrated is how flue gases can be cleaned up in a manner that is very cost effective for the power generation industry. We approached this problem in a totally different way to those that are currently being tried around the world, in that the greenhouse gases and other unwanted gases are sequentially condensed from the flue gases. The net result is that the combustion air that enters the power generating process at around 400ppm of CO_2, leaves the process at about 200ppm of CO_2, i.e. the ambient air is also being cleaned of CO_2. Thus we can turn a coal (or any other fossil fuel) fired power station into a zero CO_2 emitting power station, fuel and/or chemical producer. The sequential condensation process is based on pulse combustion driven thermoacoustic refrigerators. The system is referred to as a PUTAR, because of the configuration that we have developed for the refrigerator. Although the PUTAR is not quite as efficient as a compressor system, it is cheaper both to operate and build and has no moving parts to wear out. What differentiates the PUTAR process of CO_2 removal from power station flue gases is that it enables the steam generation efficiency to be increased and also the steam turbine efficiency to be increased. The net result is that the increase in the generated electricity more than pays for the PUTAR process of CO_2 removal. The PUTAR process of CO_2 removal can be applied to both post and pre-combustion capture of CO2, but the post-combustion is the better option because it is more cost effective and removes more of the CO_2 than does pre-combustion capture. Although the PUTAR system was originally developed with existing power stations in mind, when applied to a pulse combustion driven coal gasification system and power station we derive the most energy efficient power station. It out-performs a gas turbine/ steam turbine system for power generation at 5.19MW-h / tonne coal. The net result (without taking into account the fuel and/or chemical production profits) is that the Levelised Cost of Electricity (LCOE) ends up being less than at present and does not have to increase, as is the case with other proposed methods of CO_2 removal.

Introduction

Most developing countries are actively pursuing different methods of removing CO_2 from exhaust gases as a result of burning fossil fuels, to mitigate the effects of global warming. Australia is the invidious position of having the largest CO_2 output per head of population because of its dependence on cheap electricity produced from burning its large reserves of both black and brown coal. This paper is mainly about electricity production via fossil fuel fired boilers and CO_2 removal, although the proposed system can be applied to other carbon intensive industries such as aluminium production with similar cost

benefits.

There is a large body of opinion that thinks that the cost of capturing CO_2 will result in a doubling of the cost of electricity. There is another group who think that it is unnecessary to worry about CO_2 emissions as global warming is an artifact. Nobody (apart from ourselves) has considered the possibility that a CO_2 removal process can actually lead to reduction in electricity prices. There are other instances where pollution legislation has resulted in the pollutant becoming the main product and the original product a by-product [1] and the same is true in this instance with CO_2 being the pollutant and electricity the original product.

The CO_2 capture process falls into two camps - the pre-combustion capture and the post-combustion capture. The method that is proposed here falls into the latter camp. It has been modeled on both types of systems, with the post-combustion capture coming out in front in terms of electricity produced per unit of fuel.

The Proposed System Of CO_2 Capture

The current method of CO_2 removal that is in vogue is amine scrubbing of the flue gases. There are other methods that also need to be looked at, not only in their effectiveness in removing CO_2, but also the knock-on effect that they have on the electricity production. Some other possible routes to are listed in Table 1 below. It is well known in chemical engineering unit operations that gas scrubbing is an energy intensive process, which accounts for the fact that the amine process consumes a large portion of the electricity production and is not likely to be substantially reduced [2] enough to make it even worth considering as a potential solution. In one case of amine scrubbing of flue gases in a power station it was estimated that on a full scale operation half the station power electricity production got consumed [3]. There are two studies on carbon capture [4,5] that have been relied on for the comparisons between the options in this paper. The common figure from these studies is 30% of the produced electricity. According to House *et.al.* [6], the minimum energy penalty is 11% for this process.

Possible Routes to CO_2 Removal	Percentage CO_2 Removed	Electricity Used
Amine scrubbing of the flue gas	85	30%
Oxy-firing of the boiler	85	15%
Feeding the flue gases to growing algae	50	4%
Carbon adsorption filters	90	4%
Chemical looping	100	6%
Condensing out gases from the flue gases	100	can generate up to 45% extra

TABLE 1 Possible Routes to CO_2 Removal

Oxy-firing falls into the pre-combustion capture camp. Its main advantage is is that it markedly reduces

the quantity of flue gas to be treated, but it requires an air separation plant to provide the oxygen for the combustion process, which invariably results in the CO_2 production of this process escaping. Proponents of this process claim that it produces a pure stream of CO_2 , but it still has the potential to produce NOx in the flue gas from traces of nitrogen in the oxygen and also from the fuel nitrogen.

The algae route for CO_2 removal percentage depends on (a) the load factor of the power station, (b) the sunshine hours during the day and (c) the quality of the CO_2 in the flue gas, i.e. the presence of other gases and the partial pressure CO_2. A very generous figure has been assumed in this case.
Carbon [7] and zeolite [8] adsorption filters, using nano-technology, and chemical looping [9,10] are still in their infancy and offer better prospects than the previous three process.

The last process involves refrigerating the flue gases. This is not to dissimilar from the LNG process. By paying attention to the heat flows and using plate heat exchangers, we can shuffle the "hot" and "cold" steams and minimise the cooling required. This is not a route that has been examined in detail as far as we know. It has been dismissed as being impractical because of the volumes of flue gases to be handled, a criticism that could equally be applied to the amine capture process. The condensation process can be applied to existing power stations and other industries, such as aluminium, to remove CO_2 , but it is best applied to new power stations.

It is clear from Table 1, that on a technical basis only the condensing process has any merit. The question is - does it have it on an economic basis?

The Consequences

Starting with the current state of most coal fired power stations [11], approximately one third the of the energy going into the power station goes up the stack in the flue gas and one third lost to the cooling towers or cooling pond and the remainder appearing as electricity. The combustion air for the process now contains about 400ppm of CO_2 and the flue gases about 110000ppm of CO_2.

With the condensation process for CO_2 removal, the flue gases have to be cooled down. This is carried out by heat exchanging the flue gases with the incoming combustion air via a plate heat exchanger system. Plate heat exchangers have been chosen because of their compactness, low pressure drop and small temperature difference that they can operate with. This process gives us the first consequence, which is the boiler efficiency is improved and as a result leads to either less fuel being used or more steam generated for the same amount of fuel. Depending on how well the heat transferred to the incoming combustion air is retained by the time the combustion air gets into the boiler will determine how much the efficiency of the boiler is improved. With a new greenfields power station or well insulated and designed pipework, this could result in 46% more steam being available. Half this figure has been taken for the analysis in the next section.

The second consequence of this CO_2 removal process centres on the use of the coolant for the steam turbines. Once the CO_2 is removed from the flue gases, it is in a solid state and has to be changed to a gaseous state at elevated pressures to be dealt with by other storage or conversion processes. This is achieved by heating the cold solid CO_2 in a confined vessel with ethylene as the heat transfer fluid at 0°C and the CO_2 at -100°C. The effect of this is to increase the Carnot efficiency of the steam turbine by 5 percentage points leading to more electricity being capable of being generated from the same amount of steam.

The third consequence and this is of importance in Australia, is that no make-up water is required where wet cooling towers are used.

These three consequences result in extra cash flow being generated, that is enough to pay for this CO_2 removal process and more. There is a fourth consequence and that is that the remnant flue gas that is rejected to the atmosphere only contains at the most about 200ppm of CO_2. Thus not only does this condensation process remove all the CO_2, but it also removes some of the CO_2 that entered the power station in the combustion air. This is summarised in Figure 1.

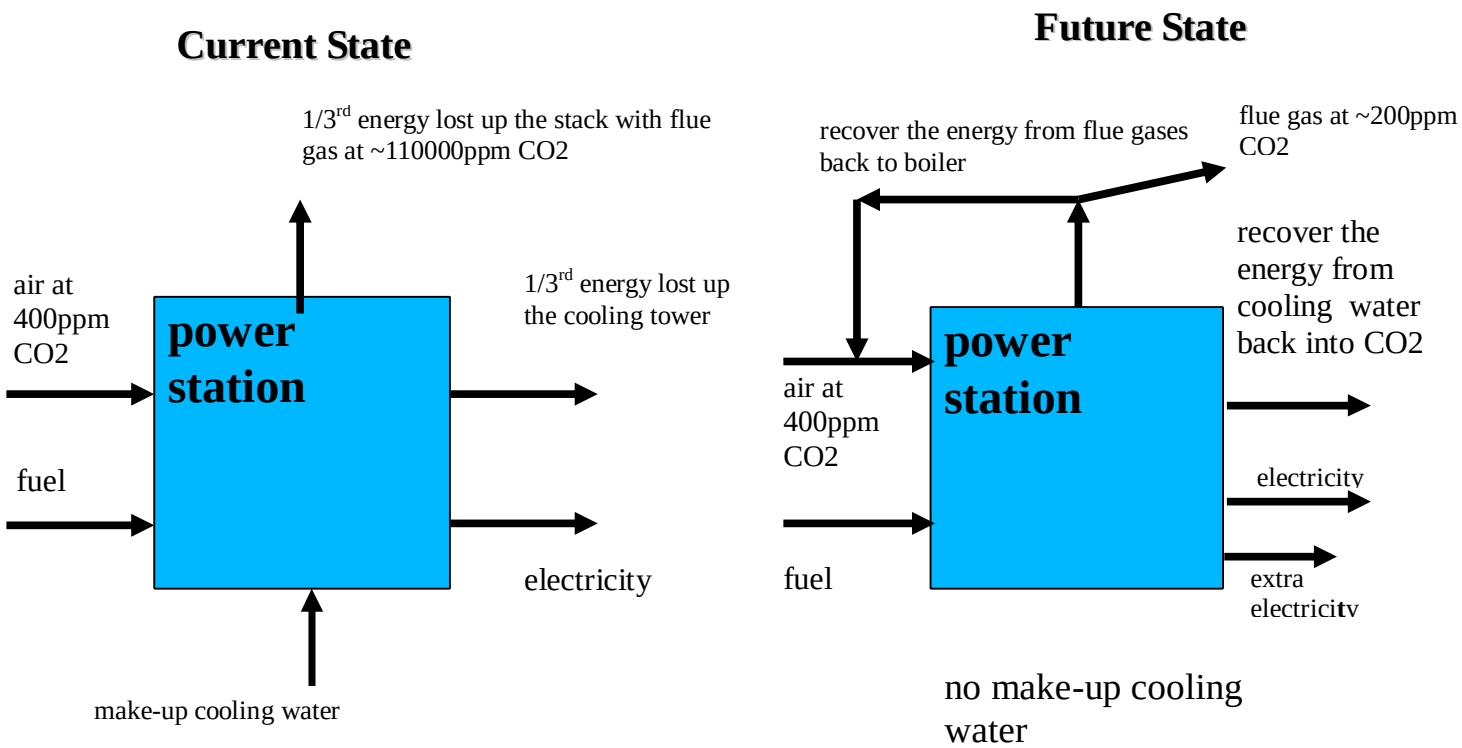

Figure 1. The consequences of using a condensation process for CO_2 removal.

The condensing process is therefore the only process that ends up being able to generate more electricity from the same quantity fuel than before.

What is a PUTAR?

PUTAR stands for **P**ulse-combustion-driven **U**-tube **T**hermo **A**coustic **R**efrigerator. This is a thermo-acoustic refrigerator driven by pulse combustion heaters with no moving parts, unlike compressor driven refrigeration systems. It operates by condensing out of the flue gas all gases condensation below 155°C in a sequential manner, such that the condensed gases are captured separately.

Heat is added at the top end via pulse combustion heaters and heat is also removed at the top end to set up a large temperature difference driving a Stirling engine. The tubes themselves are filled with helium at 3MPa (30atm). The large temperature difference sets up an acoustic wave, which travels up and down the tubes with an amplitude of ± 0.3MPa. At the bottom of the tubes is a Stirling heat pump and an interconnected orifice that throttles the helium flowing through and thus cooling it. Temperatures down to below -200°C are possible to obtain.

There are no moving parts in this refrigerator and hence the operating costs are very low. Because of the

simplicity of the design, the capital cost are lower than conventional vapour compression refrigeration systems. The various gases that can be condensed out (this list is by no means complete) are given in Table 2. The gases with an asterisk beside them are produced in negligible quantities from pulse combustion burners and can be ignored. The highest concentration is NO at ~1ppm. An artist's impression of a PUTAR is shown in Fig 2. It is based on the single tube TASHE from Ubas and van Wijngaarden [12] and overcomes the problems that they and others have faced with this unit. We have changed the top end by using pulse combustion heaters, which have 2 orders of magnitude higher heat transfer coefficients. This allows us to reduce the size of the regenerator at the top and also increase the thermal efficiency of the system. The acoustic impedance at the 'cold' end has been changed so that the time phasing always works, no matter what the conditions. Each tube assists the other and in doing so also improves the thermal efficiency of the refrigerator lowering the pressure drop that the helium gas experiences as it moves up and down the tubes.

Gas	Condensing temperature (°C)	Freezing point (°C)
H_2O	100.0	0.0
NO_2*	21.2	-11.2
SO_2*	-10.0	-73.0
H_2S*	-60.2	-86.0
CO_2	-65.0	-78.5
N_2O*	-88.5	-91.0
NO*	-152.0	-160.9

Table 2. Some flue gas properties.

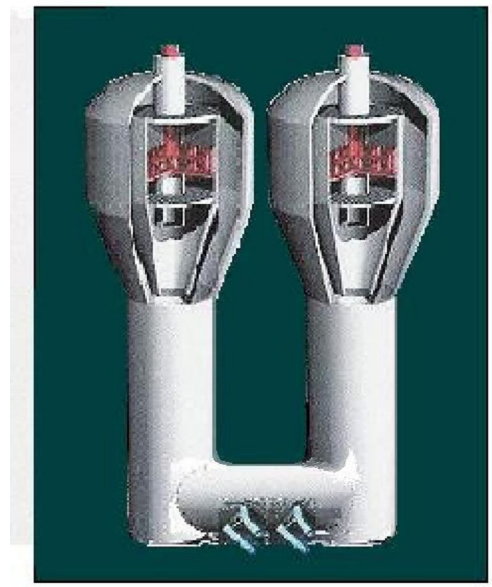

Figure 2. 200tCO_2 /day PUTAR

The Proposed Advanced Power Station

A schematic of the proposed new power station is shown in Fig 3. All the heating in this plant is by pulse combustion as it gives the highest efficiency and lowest emissions. There are three parts to this advanced power station:

1. the pulse combustion driven gasifier,
2. the super critical steam pulse combustion boiler, and
3. the PUTAR.

Variations on each of these parts have been built and operated. The gasifier does not employ an air “blow”, but pulse combustor heaters to attain the desired operating temperature. These units have very high heat transfer coefficients, about two orders of magnitude higher than corresponding conventional heat transfer coefficients [13,14,15], which is why the gasification can be done this way. The pulse combustors are based on Rijke tubes [16] and the gasifier is different from the one shown in Fig 4, which is based on Helmholtz pulse combustors [17,18].

The same version of pulse combustor is used for the PUTAR and also the super critical steam boiler. A 0.5MW version of the boiler is shown in Fig 5. The highest efficiency that has been measured for this

boiler is 98% based on the higher calorific value of the fuel. The efficiency figure that has been used in this paper is 95%. Another advantage of this pulse combustion system is the emissions which are very low. NOx is about 1ppm and is mainly NO, SOx is less than 1ppm and similarly with CO.

The heat exchangers that are used to shuffle the "heat" between stream are plate heat exchangers, PHE, [19]. They exist in sizes that are applicable to power station flues. The advantages of PHE are they are low pressure drop devices, they can operate efficiently at low temperature differences and they can be easily opened up if they need to be cleaned.

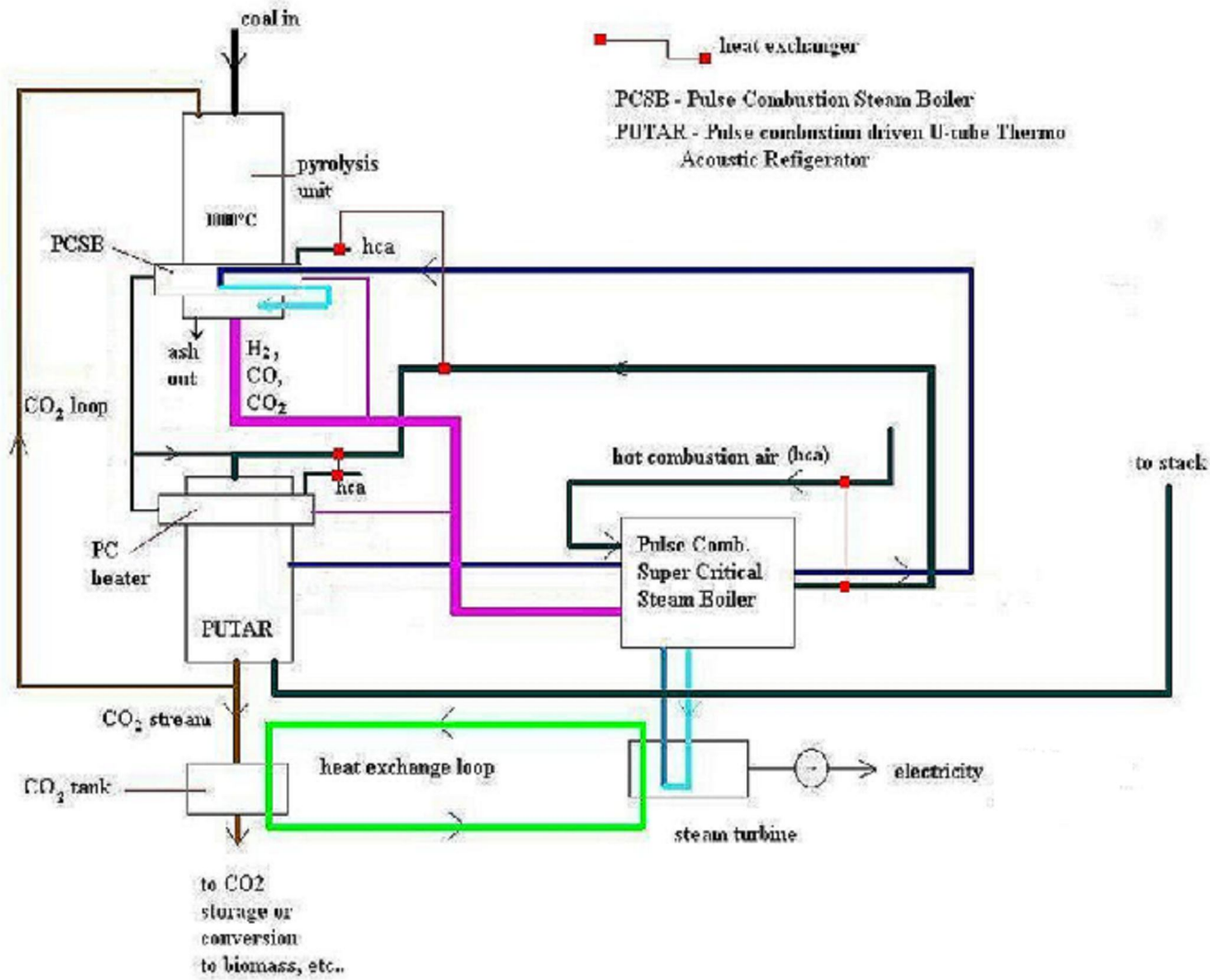

Figure 3. Advanced Power Station

The heat exchange loop between the steam turbine and the CO_2 tank contains ethylene and is used to provide the cold sink for the steam turbine and to condition the CO_2 to a state that is suitable be able to process the CO_2 at the next stage.

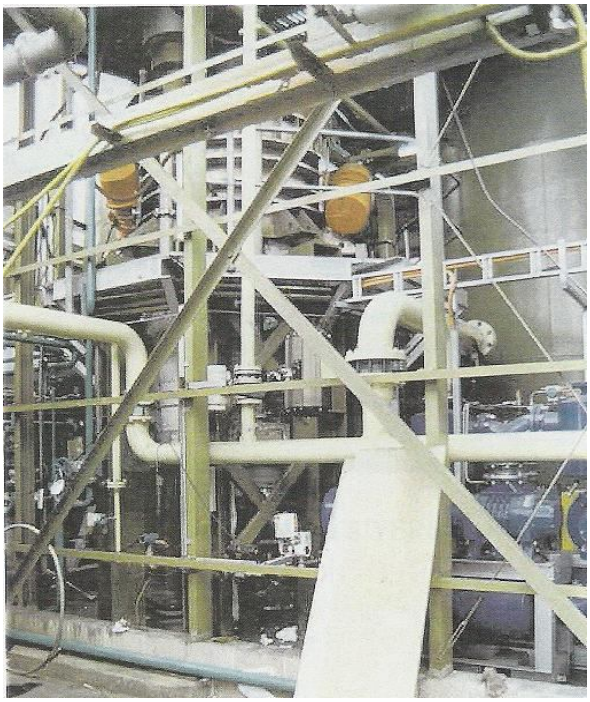

Figure 4. Pulse Combustion Gasifier

Figure 5. 0.5MW Pulse Combustion Steam Boiler

Profit and Loss Statements

The picture changes yet again when the costs of generating electricity with CO_2 removal are included. Here only the amine and condensation PUTAR CO_2 removal process have been considered with different power stations. The cost of selling the electricity from the power stations in Australia is set by AEMO and their figures are available on the web [20]. The average cost for electricity has been taken as $41.40 /MWh based on the last three years and includes the data from NEMMCO [20]. The cost of CO_2 removal has been taken as $80/t CO_2 for the amine scrubbing process [2] and $6/t CO_2 for the PUTAR process, although it is thought that it could drop as low as $3/t CO_2 with mass production of the units. The range of costs for the PUTAR have been calculated at between $3 and $8/t CO_2, the range mainly due to what the maximum size the unit can be made. It has been assumed that AEMO will not change the price of electricity from the power station from the current levels.

The profits and losses are listed in Table 3. It is based on a unit of brown coal producing 1 MWh and 1.44t CO_2 . The same quantity of coal has been used in each of the other electricity generating scenarios. The existing generator is based on Hazelwood Power Station, which is probably among the worst emitters in Australia. The cost of generation has been taken as $30 for the existing power stations and $35 for the new power stations. IGCC has been taken as the most likely candidate for new power station construction [5] because of its “high” thermal efficiency. The advanced power station that is proposed here is based on super critical steam boilers heated by pulse combustors.

In Table 3 it has been assumed that AEMO will not increase the price that the power companies can sell their electricity at to the retailers of electricity. The things that are apparent from Table 2 are:

1. that no matter what the permit price is set at, systems with the PUTAR CO_2 capture will always be profitable
2. systems with the PUTAR CO_2 capture will always be more profitable than the existing brown coal power stations

3. power stations with amine capture will always be in a no win situation because if the costs of amine capture can be reduced the permit cost is going to increase over time and negate any gains that are made.

Electricity Generating System	Relative MWh	Sell at (AU$)	Profit/MWh (AU$)	Profit/MWh with $23/t CO_2 permit(AU$)
existing brown coal	1.00	41.40	11.40	-20.80
existing brown coal with PUTAR CO_2 capture	1.35	55.89	17.49	17.51
existing brown coal with amine CO_2 capture	0.70	28.98	-96.22	-101.05
advanced power station	2.60	107.43	62.03	62.06
IGCC with amine CO_2 capture	1.49	61.48	-70.72	-75.55
IGCC with PUTAR CO_2 capture	2.12	87.56	42.16	42.18

Table 3. Profit/loss for different electricity generating systems.

What To Do With The CO_2?

It is all very well to remove the CO_2 from flue gases, but the big question is what can be done with the captured CO_2? Although the use of the advanced power station for all Australia's electricity could reduce Australia's GHG by about 28%, its still not a total solution to the greenhouse problem. There have been a number of possible solutions put forward:

1. put the CO_2 down into old oil wells or saline aquifers at a cost of just over $10/t CO_2 processed [21],
2. put the CO_2 at below 3000m at the bottom of the ocean under a membrane covered with silt at a cost of $10/t CO_2 processed [22],
3. put the CO_2 encapsulated in a membrane restrained below 1000m in the ocean $10/t CO_2 processed[22],
4. lock the CO_2 in a “carbon sponge” [8] or carbonate at a cost of $20/t CO_2 processed ,
5. convert the CO_2 into formic acid at a cost of $100/t CO_2 processed with the formic acid selling at $1440/t CO_2 processed [23], or
6. convert the CO_2 into bio-fuels via solar energy at a cost of $70/t CO_2 processed with the “crude” oil selling at $230/t CO_2 processed, (the figures for ethanol are $90 and $600), [25, 26].

The first four solutions result in further losses and are only valid options for the PUTAR based processes. The last two make the PUTAR process even more profitable. They may make other removal routes marginally profitable, but as the CO_2 permit to pollute price rises the profits could be wiped out.

Conclusions

There is no need for all the doom and gloom that has said about mitigating the release of CO_2 into the atmosphere. It has been shown here that by looking at things a little differently we can turn the mitigation process to everyone's advantage.

The other point to come out from this CO_2 mitigation process is that even if, and its a big if, global warming turns out not to be due at all from fossil fuels, it makes economic and thermodynamic sense to

install PUTAR systems into power stations.

Can we make a profit out of removing CO_2, NOx and SOx from flue gases – YES WE CAN!

References

[1] Personal Communication – DCL Distillers, Cambus, Stirlingshire, Scotland, UK

[2] Wardhaugh L *et.al*. The 8th Asia Pacific Conference on Sustainable Energy & Environmental Technologies (APCSEET 2011) 10—13, July **2011**, Adelaide, Australia

[3] Personal Communication – Leigh Miller, Tarong Energy, Queensland, Australia

[4] "*Economic assessment of carbon capture and storage technologies* 2011 Update", Worley Parsons Schlumberger supported by Global CCS Institute.

[5] NETL Final Report 5th Nov **2009**, DOE/NETL – 401/110509, "*Assessment of Power Plants That Meet Proposed Greenhouse Gas Emission performance Standards*", p28.

[6] House K.Z., Harvey C.F, Aziz M.J. & Schrag D.P. "The energy penalty of post-combustion CO_2 capture & storage and its implications for retrofitting the U.S. installed base", *Energy & Environmental Science* **2009**, DOI: 10.1039/b811608c, first published on the web 23rd Jan 2009 (http://www.rsc.org/delivery/_ArticleLinking)

[7] Radosz M, et.al. "Flue-Gas Carbon Capture on Carbonaceous Sorbents: Towards a Low-Cost Multifunctional Carbon Filter for 'Green' Energy Producers", *Industrial & Engineering Chemistry Research* **2008,** May 21, (see also .http://dx.doi.org/10.1021/ie0707974) .

[8] Yaghi O, *et.al*. *Science* (DOI: 10.1126/science.1152516) (see also Coghlan A.,"CO2 sponges could scrub emissions clean" http://www.newscientist.com/article/dn13321) .

[9] Bolhàr-Nordenkampf, J., Pröll, T., Kolbitsch, P., Hofbauer, H., 2009, "Comprehensive Modeling Tool for Chemical Looping Based Processes", *Chemical Engineering and Technology*, **2008,** *32(3)*, 410-417. doi:10.1002/ceat.200800568 .

[10] Kolbitsch, P., Pröll, T., Bolhàr-Nordenkampf J., Hofbauer, H., "Design of a chemical looping combustor using a dual circulating fluidized bed (DCFB) reactor system", *Chemical Engineering and Technology*, **2009,** *32(3)*, 398-403. doi: 10.1002/ceat.200800378 .

[11] DiPietro P & Krulla K., "Improving the Efficiency of Coal-Fired Power Plants for Near Term Greenhouse Gas Emissions Reductions", DOE/NETL -2010/1411 **2010,** April

[12] Ubas M. & van Wijngaarden W., "Thermoacoustic Refrigeration Provides An Innovative Solution To Managing The Associated Gas Problem" figure 5, Presented at the Gas Processors Association - Continental Meeting 27 - 29 September, 2000 Barcelona, Spain.

[13] Proctor D., Measurements made in a bed of alumina particles with and without pulse combustion showing that the heat transfer coefficient rose from about 5 $Wm^{-2}K^{-1}$ to about 1500 $Wm^{-2}K^{-1}$ once pulsating heat was being transferred. Poster Paper presented at 2000 Combustion Institute Symp. Edinburgh.

[14] Fontenot D.G., Thesis "*Transient Heat Transfer Properties in a Pulse Detonation Combustor*" US Naval Postgraduate School, Monterey, California, March 2011.

[15] Keil R.H. & Baird M.H.I., "Enhancement of Heat Transfer by Flow Pulsation" *Ind. Eng. Chem. Process Des. Develop*.**1971,** *10*:473 .

[16] Rijke P.L., *Philosophical Magazine* **1859,** *17*, 419 .

[17] Proctor D., "The Application of Pulse Combustion Systems to the Brightstar-Environmental Pyrolysis Process" CSIRO Confidential DBCE DOC. 02/086 report, 17 Apr 2002.

[18] NETL "*Pulse Combustor Design A DOE Assessment"* DOE/NETL – 2003/1190.

[19] SPX Flow Technology Australia Pty Ltd, Mulgrave ,VIC , Australia (http://www.apv.com/us/products/heatexchangers/Heat+exchangers.asp)

[20] AEMO – Australian Energy Marketing Operator http://www.aemo.com.au this site also contains the

older data from NEMMCO.
[21] CO2CRC Otway Project, see http://www.co2crc.com.au/otway/
[22] House K.Z., Schrag D.P., Harvey C.F, & Lackner K.S. "Permanent carbon dioxide storage in deep-sea sediments" *PNAS* **2006,** *103 no 33*, 12291-12295 .
(http://www.pnas.org/cgi/doi/10.1073/pnas.0605318103)
[23] Mantra Energy Alternatives Ltd see:
http://www.mantraenergy.com/Technology/ERCTechnology.aspx
[24] Steinfeld A., "Fuels from Water, CO_2, and Solar Energy" The 8th Asia Pacific Conference on Sustainable Energy & Environmental Technologies (APCSEET 2011) 10—13, July 2011, Adelaide, Australia
[25] MBD Energy Ltd http://www.mbdenergy.com/about_us.php
[26] Joule Unlimited Technologies Inc., http://www.jouleunlimited.com/why-solar-fuel/overview

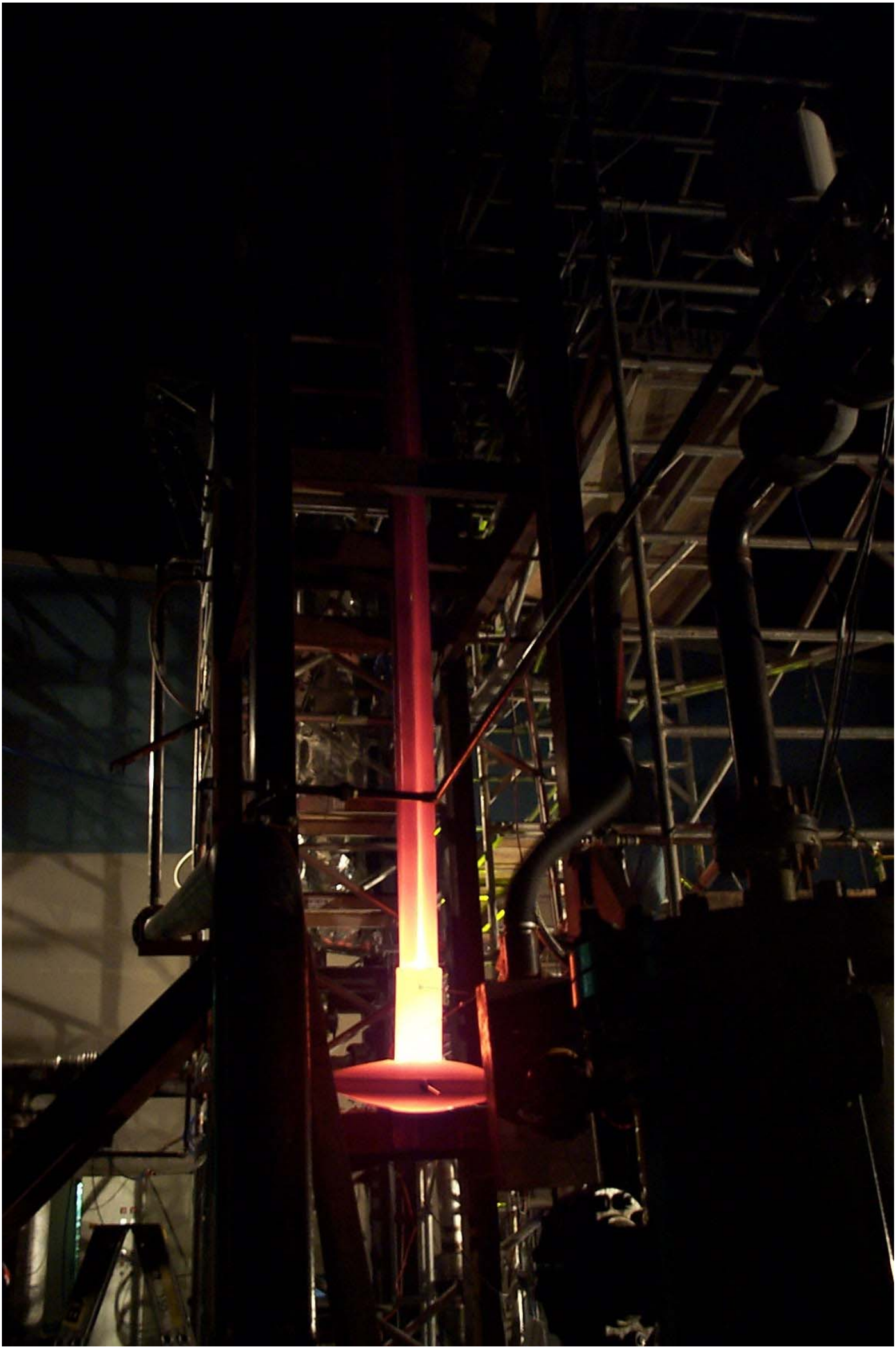

PNAS
Proceedings of the National Academy of Sciences of the United States of America www.pnas.org

Permanent carbon dioxide storage in deep-sea sediments

Kurt Zenz House, Daniel P. Schrag, Charles F. Harvey, and Klaus S. Lackner

PNAS published online Aug 7, 2006;
doi:10.1073/pnas.0605318103

This information is current as of November 2006.

	This article has been cited by other articles: www.pnas.org#otherarticles
E-mail Alerts	Receive free email alerts when new articles cite this article - sign up in the box at the top right corner of the article or click here.
Rights & Permissions	To reproduce this article in part (figures, tables) or in entirety, see: www.pnas.org/misc/rightperm.shtml
Reprints	To order reprints, see: www.pnas.org/misc/reprints.shtml

Notes:

Permanent carbon dioxide storage in deep-sea sediments

Kurt Zenz House*†, Daniel P. Schrag*, Charles F. Harvey‡, and Klaus S. Lackner§

*Department of Earth and Planetary Sciences, Harvard University, Cambridge, MA 02138; ‡Department of Civil and Environmental Engineering, Massachusetts Institute of Technology, Cambridge, MA 02139; and §Earth Engineering Center, Columbia University, New York, NY 10027

Communicated by John P. Holdren, Harvard University, Cambridge, MA, June 27, 2006 (received for review November 10, 2005)

Stabilizing the concentration of atmospheric CO_2 may require storing enormous quantities of captured anthropogenic CO_2 in near-permanent geologic reservoirs. Because of the subsurface temperature profile of terrestrial storage sites, CO_2 stored in these reservoirs is buoyant. As a result, a portion of the injected CO_2 can escape if the reservoir is not appropriately sealed. We show that injecting CO_2 into deep-sea sediments <3,000-m water depth and a few hundred meters of sediment provides permanent geologic storage even with large geomechanical perturbations. At the high pressures and low temperatures common in deep-sea sediments, CO_2 resides in its liquid phase and can be denser than the overlying pore fluid, causing the injected CO_2 to be gravitationally stable. Additionally, CO_2 hydrate formation will impede the flow of CO_2(l) and serve as a second cap on the system. The evolution of the CO_2 plume is described qualitatively from the injection to the formation of CO_2 hydrates and finally to the dilution of the CO_2(aq) solution by diffusion. If calcareous sediments are chosen, then the dissolution of carbonate host rock by the CO_2(aq) solution will slightly increase porosity, which may cause large increases in permeability. Karst formation, however, is unlikely because total dissolution is limited to only a few percent of the rock volume. The total CO_2 storage capacity within the 200-mile economic zone of the U.S. coastline is enormous, capable of storing thousands of years of current U.S. CO_2 emissions.

climate change | CO_2 hydrates | energy | sequestration

Supplying the energy demanded by world economic growth without affecting the Earth's climate is one of the most pressing technical and economic challenges of our time. If fossil fuels, particularly coal, remain the dominant energy source of the 21st century, then stabilizing the concentration of atmospheric CO_2 will require developing the capability to capture CO_2 from the combustion of fossil fuels and store it safely away from the atmosphere (1).

Several ideas have been proposed for the long-term storage of captured anthropogenic CO_2. These proposals include: storing CO_2 in various geologic formations [e.g., oil and gas fields (2), coal beds (3), and saline aquifers (4)], injecting CO_2 into the deep ocean (5, 6), and chemically transforming CO_2 into thermodynamically stable minerals (1, 7) or bicarbonate brines (8, 9). We describe storing CO_2 in deep-sea sediments as a fourth storage option that combines beneficial elements of geologic storage, oceanic storage, and geochemical storage while addressing many of their drawbacks.

Storage of captured CO_2 in terrestrial geologic formations is a leading candidate for near-term storage. All terrestrial geologic formations, however, face a common challenge. Because of the geothermal gradient in the continental crust, the temperature at injection is always greater than the critical temperature of CO_2. Under the high pressures (10–30 MPa) and high temperatures (330–400 K) of terrestrial storage sites, supercritical CO_2 is 40–70% less dense than the surrounding pore fluid (10). This density contrast causes the buoyant CO_2 to migrate upward through any available conduit. As a result, all terrestrial storage reservoirs either must have impermeable layers (i.e., cap rocks) or all of the injected CO_2 must become immobile as residual saturation to prevent the release of buoyant fluids. Natural-gas reservoirs have existed for millions of years, demonstrating that geologic formations can store buoyant fluids for long time periods. Over the last century, however, millions of wells have been drilled in most of the basins being considered for geologic storage, and each of these wells is a potential conduit for buoyant CO_2 to escape (11). The concern over leakage will require geologic storage sites to be monitored for centuries, and it is unclear who will be responsible for verifying the storage integrity over these time scales.

Injecting CO_2 directly into the deep ocean, where most of it will dissolve as bicarbonate, is another option for CO_2 storage (12). Deep-ocean injection can be seen as accelerating the natural oceanic uptake of CO_2, which would occur over many centuries (13). Unfortunately, because of ocean currents and local supersaturation, a large fraction of the injected CO_2 will be released to the atmosphere after a few hundred years (14). Additionally, direct ocean storage is currently unpopular because of concerns about the effects of CO_2 on marine ecosystems.¶ Unless there is a change in the political climate, it is unlikely that direct ocean storage will be used on large scales.

Chemically transforming captured CO_2 into bicarbonate brines or thermodynamically stable minerals is a third storage option. Forming bicarbonate brines through the dissolution of calcium carbonate has been suggested as a way to neutralize carbonic acid before ocean injection (8, 9). Separately, it has been proposed that CO_2(g) can be reacted with silicate minerals to form thermodynamically stable carbonate minerals (1). Mineralization, the most stable and permanent form of CO_2 storage, is an acceleration of the natural chemical weathering cycle (15). At surface temperatures, however, the reaction kinetics are very slow, and accelerating the kinetics to industrial rates with current technology costs 3 to 10 times more than terrestrial geologic storage (16).

Results

Gravitational Stability. Because of the high compressibility of CO_2(l) relative to water, CO_2(l) becomes denser than water at high pressures and low temperatures (Fig. 1). These temperature–pressure regimes do not exist in terrestrial settings; they are, however, common in the deep ocean. When CO_2(l) is injected into the ocean at a depth of 3,000 m, it sinks, forming a lake of CO_2(l) on the seafloor (17). As previously discussed, however, ocean currents will mix the injected CO_2(l), causing a large fraction to eventually be released into the atmosphere (14). To ensure that deep ocean currents will not mix the CO_2 into shallower regions, CO_2 can be injected below the seafloor.

Conflict of interest statement: No conflicts declared.

Abbreviations: HFZ, hydrate formation zone; NBZ, negative buoyancy zone.

†To whom correspondence should be addressed. E-mail: khouse@fas.harvard.edu.

¶Barry, J. P., Seibel, B. A. & Lovera, C., American Geophysical Union Fall Meeting, December 10–14, 2001, San Francisco, CA.

© 2006 by The National Academy of Sciences of the USA

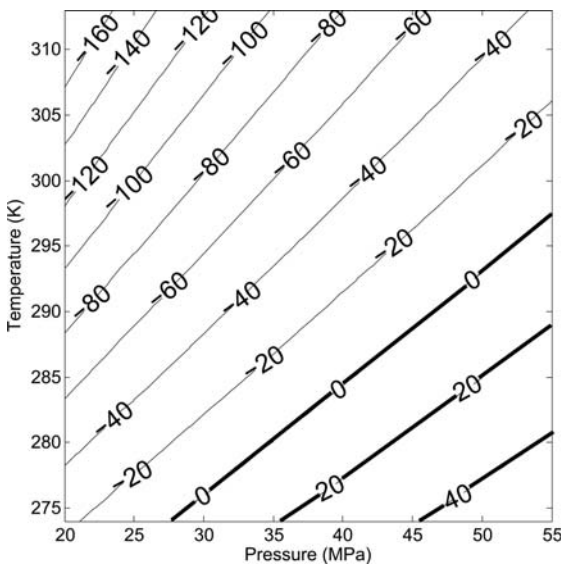

Fig. 1. Density (kg/m^3) difference between CO_2(l) and seawater (1,027 kg/m^3) as a function of temperature and pressure (10). The bold lines indicate the pressure–temperature space of the NBZ.

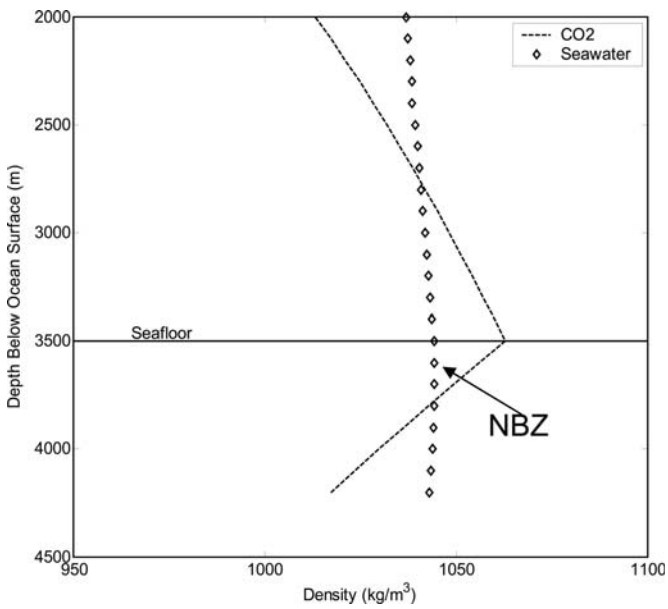

Fig. 2. Because CO_2(l) is more compressible than seawater, it becomes denser than seawater at ≈3,000 m (10). Once below the seafloor, however, the geothermal gradient causes the CO_2(l) to expand more rapidly than seawater. Eventually, the ambient temperature becomes hot enough that CO_2(l) becomes less dense than the pore fluid. (Note: A linear geothermal gradient of 0.03°C/m was assumed.)

Furthermore, if the seafloor depth of injection is >3,000 m, then the injected CO_2 will be denser than the ambient pore fluid. The lower density pore fluid acts as a buoyancy cap on the system and ensures gravitational stability. The gravitational stability of the system in deep-sea sediments is in contrast with terrestrial geologic storage where the high pressures and high temperatures cause the injected supercritical CO_2 to be gravitationally unstable. The buoyancy cap, provided by the pore water, serves the same purpose in deep-sea sediments as a cap rock serves in terrestrial geologic formations. The buoyancy cap, however, is superior to a cap rock because conduits in a cap rock enable buoyant CO_2 to escape. In contrast, the gravitational stability provided by the buoyancy cap guarantees that fractures in the sediment column cannot serve as conduits for the CO_2, and even large geomechanical perturbations, such as earthquakes, cannot cause the CO_2(l) to be released.

Storing CO_2 in deep-sea sediments was first proposed by Koide *et al.* (18) who considered storing CO_2–clay–ash solutions and CO_2(l) below tens of meters of unconsolidated marine sediments. They identified three seafloor depth regimes for the storage of dissolved CO_2: "shallow subseabed" (<300 m), "deep subseabed" (300–3,700 m), and "super deep subseabed" (>3,700 m). In this study, we describe a different scenario than envisioned by Koide *et al.* Specifically, we consider injecting pure CO_2(l) below at least 3,000 m of ocean and several hundred meters of marine sediment. The key aspect of our study is to inject pure CO_2(l) below the sediment layer where CO_2 hydrates form and below the sediment layer of less dense pore fluid. As will be discussed, the relative location of these sediment layers and the injected CO_2(l) ensures permanent CO_2 storage.

The geothermal gradient, which varies from 0.02°C/m to 0.04°C/m, controls changes in the density of CO_2(l) injected into deep-sea sediments by expanding and contracting the mobile CO_2(l) until its density equals the density of the surrounding pore fluid. Given a seafloor depth of 3,500 m and a geothermal gradient of 0.03°C/m, the injected CO_2(l) becomes neutrally buoyant at ≈200 m below the seafloor (10). Above the sediment depth of neutral buoyancy, the CO_2(l) is denser than the ambient pore fluid. We refer to this range between the seafloor and the sediment depth of neutral buoyancy as the negative buoyancy zone (NBZ) (Fig. 2).

Postinjection Chemistry and Sediment Composition. To fully describe the fate of CO_2 injected below the seafloor, the chemical reactions between CO_2, seawater, and sediments must be considered. CO_2 that has been injected into deep-sea sediments will slowly dissolve, forming a CO_2(aq) solution that is denser than the surrounding pore fluid (19). At 30 MPa and 3°C, the solution becomes saturated at a CO_2(aq) mole fraction of ≈5% (20). The solubility of CO_2 indicates that a given quantity of CO_2(l) must interact with 20 times as much pore fluid to fully dissolve. Therefore, during the injection, CO_2(l) is the dominant phase.

The composition of the marine sediments near the injection site will determine how the injected CO_2 interacts with the host rock. Calcareous sediments might be an attractive repository because of their relatively high permeability (21) and their tendency to react with carbonic acid. If CO_2 were injected into calcareous sediments at high pressure, then the relatively low pH of the CO_2(aq) solution is expected to dissolve carbonate minerals and add alkalinity to the pore fluid. The addition of alkalinity to the pore fluid will decrease the concentration of CO_2(aq) by shifting the carbonate equilibrium toward bicarbonate. Bicarbonate is a more permanent storage state than CO_2(aq) because bicarbonate cannot directly degas from solution.

The total dissolution of carbonate minerals, however, is expected be relatively small; for a cubic meter of limestone of 50% porosity filled with CO_2-saturated pore water in equilibrium with 30 MPa pCO_2, ≈7.5 kg or 0.5% of the rock will dissolve before the pore fluid is saturated. It is important to note that the saturation calculation assumes the CO_2-saturated pore fluid is not flowing. As described in *Long-Term Fate of CO_2 in Deep-Sea Sediments* below, both the pure CO_2(l) phase and the CO_2-saturated pore fluid are expected to flow by buoyancy-driven advection. As result of that flow, certain regions in the porous media may become undersaturated in Ca^{2+}, enabling additional dissolution of the host rock.

Because CO_2 would be injected as a separate liquid phase, the host rock will not experience large fluxes of CO_2(aq) near the injection well. Nevertheless, host-rock dissolution may be im-

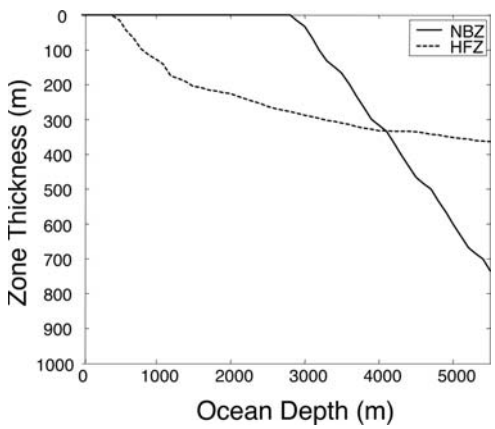

Fig. 3. The thicknesses of the HFZ and the NBZ as a function of the seafloor depth of injection. (Note: A linear geothermal gradient of 0.03°C/m was assumed.)

portant because minor increases in porosity have been shown to generate large increases in permeability (22–24). The exact relationship between porosity and permeability in carbonate sediment is highly variable (25), and further work is required to quantify whether carbonate dissolution will have a significant effect.

CO_2 Hydrate Formation. The high pressures and low temperatures necessary to compress CO_2(l) to greater density than the pore fluid are similar to the conditions necessary for CO_2 hydrates to form. CO_2 hydrates (5.75 $H_2O{\cdot}CO_2$) are nonstoichiometric crystalline compounds that form at high pressures and low temperatures by trapping CO_2 molecules in hydrogen-bonded cages of H_2O (26). These compounds occur in a three-phase metastable equilibrium between CO_2(l), CO_2(aq), and hydrate (20).

We refer to the subseafloor region with low enough temperatures and high enough pressures for hydrate formation as the hydrate formation zone (HFZ). The HFZ extends from the seafloor downward into the sediment until the temperature rises above the boundary of the hydrate stability field. A comparison of the stability conditions for CO_2 hydrates (27) with the CO_2 buoyancy-depth relationship reveals that the HFZ overlaps to a great extent with the NBZ. Although the HFZ exists in submarine sediment at seafloor depths of ≈400 m, CO_2(l) does not become denser than seawater until a seafloor depth of ≈2,900 m. Below ≈2,900 m of ocean, however, the thickness of the NBZ grows more rapidly then the thickness of the HFZ, and at seafloor depths >4,000 m, the NBZ is thicker than the HFZ (Fig. 3).

The overlap of the HFZ and the NBZ presents both implementation difficulties and storage opportunities. Hydrates are immobile crystals that clog pore spaces and impede flow. As a result, hydrate formation is expected to generate a self-forming cap that limits the migration of CO_2 and enhances storage stability. On the other hand, if the injection point is within the HFZ, then hydrate formation will decrease permeability near the injection point and may increase the energy required for injection. The optimal sediment depth of injection will depend on the relationship between depth and intrinsic permeability and on the degree to which hydrate formation affects the relative permeability of CO_2. The composition of the injection site below the HFZ may be either chalk or limestone. The intrinsic permeability of chalk and limestone ranges from 0.1 to 1,000 mD (28). If the intrinsic permeability below the HFZ is lower than the relative permeability of CO_2(l) to CO_2 hydrates, then no benefit is gained from injecting below the HFZ. Further work is needed to establish the effect of hydrate formation on permeability. We expect, however, that hydrate formation will cause sharp reductions in the relative permeability of CO_2(l), and that locating the injection point below the HFZ will be energetically favorable to locating it within the HFZ.

When the seafloor depth is shallower than 4,000 m, the HFZ is thicker than the NBZ, and avoiding hydrate formation near the injection point requires that the CO_2(l) be injected below both the HFZ and the NBZ. CO_2(l) injected below the NBZ is buoyant at the point of injection and will rise until it reaches the bottom of the HFZ. As the CO_2(l) flows into the HFZ, it will form CO_2 hydrates, which will clog the pore space and form a cap that limits the upward migration of the remaining CO_2(l) (29). If the hydrate cap does not form an impermeable seal, then some CO_2(l) may flow within the HFZ to the bottom of the NBZ. Once that CO_2 reaches the bottom of the NBZ, it becomes neutrally buoyant and gravitationally stable. Injecting below both the HFZ and the NBZ takes advantage of both the buoyancy cap provided by the NBZ and the self-forming hydrate cap provided by the HFZ.

If CO_2 were injected into sediment below a seafloor depth of 4,000 m, where the NBZ is thicker than the HFZ, then the CO_2 would be injected below the HFZ and directly into the NBZ. In such a configuration, hydrates are unlikely to form because the CO_2(l) is expected to percolate away from the HFZ to the bottom of the NBZ where it will reside beneath both the buoyancy cap and the hydrate cap.

Discussion

Thermal Evolution of the Injected CO_2. As the CO_2 is pumped from the surface to the seafloor, heat will be transferred from the relatively warm CO_2 to the relatively cold ocean water. The temperature of the CO_2 in the pipeline as a function of depth below the ocean surface is given by the solution to the radial heat equation:

$$T(z) = T_{\text{ocean}} + (T_1 - T_{\text{ocean}})e^{-\frac{2K}{uz\Delta r r_1 \rho C_p} z}, \qquad [1]$$

where k is the thermal conductivity of the pipe, ρ is the density of the fluid, r_1 is the inner radius of the pipe, Δr is the pipe thickness, T is the temperature of the CO_2 in the pipe, u_z is the velocity in the vertical direction, T_{ocean} is ocean temperature, and z is the water depth below the ocean surface. For reasonable values [K = 50 W/(m·K), r_1 = 0.25 m, Δr = 0.1 m, Cp = 2,000 J/(kg·K), ρ = 1,000 kg^3/m^3, and u_z = 1 m/s] the exponential coefficient becomes about −0.002 at z = 3,000 m. Therefore, unless the pipeline is insulated, the CO_2 in the pipeline will thermally equilibrate with the ocean by the time it reaches the seafloor.

Beneath the seafloor, the sediment temperature increases by 0.02 to 0.04°C/m, but the relatively short period it takes CO_2(l) to flow through the pipeline from the seafloor to the injection point is not long enough for the CO_2(l) in the pipeline to thermally equilibrate with the sediment. Furthermore, thermal boundary layers are expected to form in the sediment around the pipe, further insulating the CO_2 once it passes beneath the seafloor. As a result, if the temperature inside the pipe is not carefully controlled, then the CO_2(l) temperature at the injection point will be several degrees colder than the pore fluid and cold enough to form CO_2 hydrates. The primary reason to inject CO_2(l) below the HFZ is to avoid hydrate formation near the injection point. Therefore, it will be necessary to carefully control the CO_2(l) temperature at the injection point by either heating the CO_2(l) in the pipeline or insulating the ocean pipeline to keep the CO_2(l) at higher temperatures.

During injection, the CO_2(l) may be colder than the surrounding pore fluid and host rock. Depending on the injection temperature, the CO_2(l) may be positively, negatively, or neutrally buoyant near the injection point. Over time, however, the CO_2(l) plume will spread, and the regions of the plume farthest

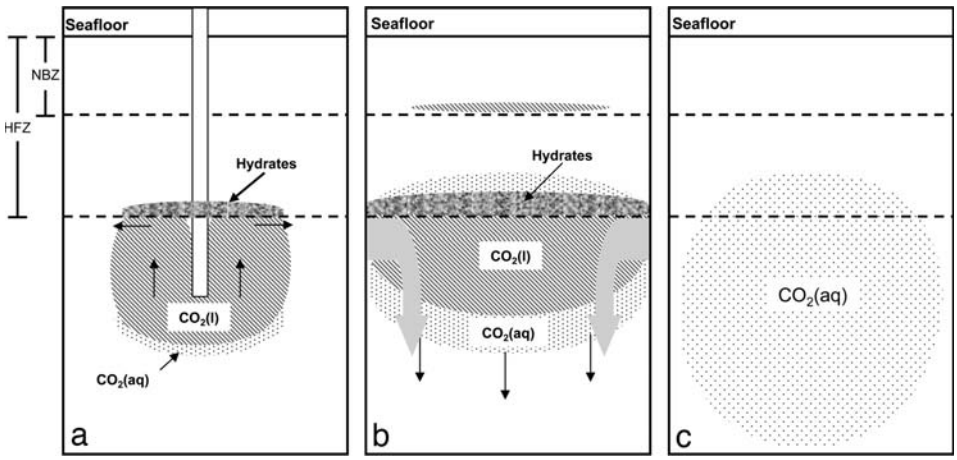

Fig. 4. The long-term evolution of the injected CO_2. (*a*) On the injection time scale (≈1 yr), small amounts of hydrate form as the top of the plume enters the HFZ. The hydrate that forms is expected to impede the upward migration of CO_2(l) and force the CO_2(l) to flow laterally. (*b*) After $\approx 10^2$ years, most of the CO_2 will have reached the bottom of the HFZ, and we expect the self-forming hydrate cap will have expanded laterally and trapped substantial quantities of CO_2(l) below it. Simultaneously, the CO_2-saturated pore fluid will sink away from the HFZ by buoyancy-driven advection. (*c*) Eventually the CO_2(l) and CO_2 hydrates will have dissolved and formed a CO_2(aq) solution. The solution will percolate through the porous matrix until it has mixed with a large enough quantity of water to become neutrally buoyant. Once the solution is neutrally buoyant, further solute migration will only occur by diffusion.

from the injection point will reach thermal equilibrium with the pore fluid. As heat is transferred from the pore fluid and the host rock to the CO_2(l), the CO_2(l) will expand and rise to the bottom of the HFZ where CO_2 hydrates begin to form.

An interesting feature of this system is that the coefficient of thermal expansion for CO_2(l) is high enough that, given a high enough intrinsic permeability, a typical geothermal gradient may drive some convection within the fully saturated CO_2(l) plume (30). The criterion for the onset of convection in a saturated porous layer subject to a vertical temperature gradient is given by the Rayleigh-Darcy number (30, 31). For the system of interest (i.e., liquid CO_2 at ≈30 MPa and ≈8°C subject to a geothermal gradient of ≈0.03°C/m) the stability condition indicates that the saturated CO_2(l) plume is convectively unstable when the effective permeability is greater than $\approx 10^{-15}$ m^2. This stability threshold indicates that we should expect some convection within the saturated CO_2(l) plume because the reservoirs of interest have permeabilities in the range of 10^{-15} m^2 to 10^{-12} m^2. The onset of convection may be important in entraining additional water into the CO_2(l) plume, which will cause the CO_2(l) to dissolve more rapidly.

Long-Term Fate of CO_2 in Deep-Sea Sediments. We expect the CO_2(l) injected below the seafloor to evolve in a way that ensures permanent storage (Fig. 4). Initially, the CO_2(l) injected below the HFZ and the NBZ will flow upward until it reaches the bottom the HFZ. Multiphase flow in porous media is partially described by Darcy's law with the additional relative permeability parameter (K_i):

$$u_i = -\frac{\kappa K_i}{\mu_i}(\nabla P_i + \rho_i g), \qquad [2]$$

where κ is the intrinsic permeability, K_i is the relative permeability of phase i, P_i is the pressure of phase i, ρ_i is the density of phase i, μ_i is the viscosity of fluid i, and g is gravity. As an order of magnitude calculation for the instantaneous flow rate of the CO_2(l) phase at a particular point in space and time, the driving force of the flow is the difference in density between CO_2(l) and seawater:

$$u_{CO_2} \approx -\frac{\kappa K_{CO_2} g}{\mu_{CO_2}}(\rho_{CO_2} - \rho_{H_2O}). \qquad [3]$$

For reasonable values (e.g., $\kappa \approx 10^{-13}$ m^2, $K_{CO_2} \approx 1$, $g \approx 10$ m/s^2, $\mu_{CO_2} \approx 10^{-4}$ kg/(ms), and $\rho_{H_2O} - \rho_{CO_2} \approx 10^2$ kg/(m^3)], u_{CO_2} is on the order of 10^{-6} m/s (≈10 m/yr). All of the parameters described are well constrained except for the intrinsic permeability (κ), which can vary from 10^{-12} m^2 to $\approx 10^{-15}$ m^2, resulting in a range of velocities from 10^2 m/yr to $\approx 10^{-1}$ m/yr.

Once the CO_2(l) reaches the bottom of the HFZ, then CO_2 hydrates will form, clogging pore channels and creating a cap of limited permeability. We expect the additional CO_2 flowing up from the injection point to become physically trapped beneath the hydrate cap and be forced to spread laterally. As the CO_2(l) flows laterally, the hydrate cap will grow, resulting in a larger storage area.

The hydrates that compose the self-forming cap are stable as long as they are in contact with pore fluid saturated with CO_2(aq). Assuming the CO_2(l) to CO_2(aq) dissolution kinetics are rapid, then the pore fluid in contact with pure CO_2(l) plume will be saturated in CO_2(aq) until the entire plume of CO_2(l) dissolves. Therefore, the CO_2 hydrate cap will not dissolve until the CO_2(l) plume has fully dissolved.

The CO_2(l) plume will dissolve more rapidly than expected by diffusion alone because buoyancy-driven advection will mix the CO_2(l) with the pore fluid. Pore fluid that becomes saturated in CO_2(aq) will sink because it is denser than both the CO_2(l) and the pristine pore fluid (19). We expect the sinking of the saturated pore fluid to entrain additional pore fluid from outside the CO_2(l) plume and accelerate the dissolution of CO_2(l) and CO_2 hydrates. Assuming a diffusion constant of $\approx 10^{-9}$ m^2/s and a tortuosity of $\approx 10^{-1}$, diffusion sets the upper-bound on the time scale of hydrate dissolution at $\approx 10^6$ years.

It is clear, however, that buoyancy-driven advection and convection will accelerate the dissolution of the CO_2 hydrate and the downward transport of CO_2. Once the CO_2 hydrates fully dissolve, the CO_2(aq)-saturated pore fluid is expected to percolate downward through the sediment column, and the CO_2(aq) concentration is expected to decline as the solution mixes with greater and greater volumes of water. Eventually, the buoyancy-driven advection will cease as the density difference between the

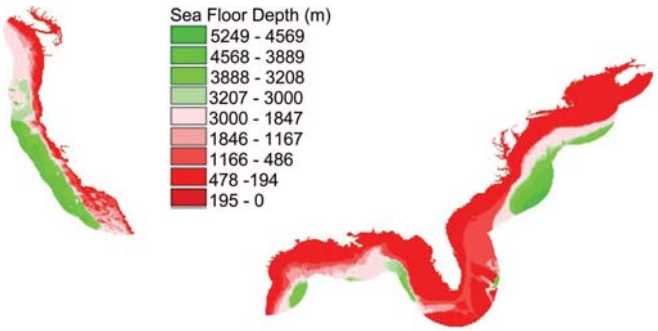

Fig. 5. More than 22% of the seafloor within the 200-mile economic zone of the U.S. coast is <3,000 m deep, which represents $>1.3 \times 10^6$ km^2 of potential CO_2 storage area.

CO_2(aq) solution and the pore fluid vanishes. Once that occurs, further CO_2 transport can only be accomplished by diffusion of the aqueous phase. We hope that further modeling work will determine to what degree buoyancy-driven advection and convection accelerate the hydrate dissolution and the downward transport of CO_2.

Storage Capacity. If the CO_2 storage site is 300 m thick with 50% porosity and 50% residual water, then the total annual U.S. CO_2 emissions [$\approx$6 Gt of CO_2(l)] could be stored in a $\approx$80-km^2 area. Fig. 5 indicates that over $\approx$22% (1.3×10^6 km^2) of the seafloor within the economic zone of the continental U.S. is >3,000 m deep (32), which represents $>10^4$ Gt of permanent CO_2(l) storage. Outside the economic zone of the United States, the total CO_2 storage capacity in deep-sea sediments is essentially unlimited.

Not all regions below 3,000 m of ocean are appropriate for CO_2 storage. Three factors will further limit the potential storage volume. First, the sediments must be thicker than the HFZ. Second, the sediments must be permeable enough to inject large quantities of liquid CO_2 at high flow rates. Third, CO_2(l) should not be injected beneath very steep slopes as landslides may expose the CO_2(l). The thickness of the sediment is not very limiting because the majority of deep-sea sediments on the North American continental margins are thicker than the HFZ. There may, however, be mechanical difficulties associated with injecting large quantities of CO_2 into deep-sea sediments that will be discovered after further study and experimentation. Finally, a volume of pore water roughly equal to the volume of injected CO_2 will be forced up into the ocean from the sediments. The implications of forcing the pore water into the ocean must be considered.

Summary

Deep-sea sediments at high pressure and low temperature provide a virtually unlimited and permanent reservoir for carbon dioxide captured from fossil fuel combustion. When injected below the ocean floor at an ocean depth >3,000 m, CO_2 will remain below a layer of more buoyant pore fluid. Hydrate formation will also impede the upward flow of CO_2 as it cools along a geothermal gradient. Carbonate dissolution will play a minor role in the system and may affect permeability within the reservoir. Over time scales of thousands of years, the CO_2 will dissolve into the pore fluid, and the CO_2(aq) solution will sink until it becomes sufficiently dilute such that its density equals the density of the surrounding pore fluid. Further transport can only be accomplished by molecular diffusion over millions of years. If field experiments confirm that the system behaves as described, then the permanence guaranteed by the double cap of buoyancy and CO_2 hydrates will enable CO_2(l) to be stored without any investment in monitoring or verification technology. For these reasons, we propose that CO_2 storage in deep-sea sediments at high pressures and low temperatures be considered along with other options.

We thank John Holdren, Jeffery Bielicki, David Thompson, David Keith, Rick Murray, and Juerg Matter for assistance and advice. This work was supported by Department of Energy Grant DE-FG26-04NT-42123, the Merck Fund of the New York Community Trust, and a graduate student fellowship from the Link Foundation (to K.Z.H.).

1. Lackner, K. (2002) *Annu. Rev. Energy Environ.* **27,** 193–232.
2. Stevens, S., Velo, K., Gale, J. & Beecy, D. (2001) *Environ. Geosci.* **8,** 200–209.
3. Gale, J. & Freund, P. (2001) *Environ. Geosci.* **8,** 210–217.
4. Nordbotten, J., Celia, M. & Bachu, S. (2005) *Transport Porous Media* **58,** 339–360.
5. Drange, H., Alendal, G. & Johannessen, O. M. (2001) *Geophys. Res. Lett.* **28,** 2637–2640.
6. Herzog, H. (2001) *Environ. Sci. Technol.* **35,** 148A–153A.
7. O'Conner, W. K., Dahlin, D. C., Turner, P. C. & Walters, R. (1999) *Carbon Dioxide Sequestration by Ex-Situ Mineral Carbonation* (Albany Research Center, Office of Fossil Energy, Department of Energy, Albany, OR), DOE/ARC-99-009.
8. Rau, G. & Caldeira, K. (1999) *Energy Convers. Manage.* **40,** 1803–1813.
9. Rau, G. & Caldeira, K. (2000) *Geophys. Res. Lett.* **27,** 225–228.
10. Lemmon, E. W., McLinden, M. O. & Friend, D. G. (2005) in *NIST Chemistry WebBook, NIST Standard Reference Database*, eds. Linstrom, P. J. & Mallard, W. G. (National Institute of Standards and Technology, Gaithersburg, MD), Standard Reference Database no. 69.
11. Nordbotten, J., Celia, M., Bachu, S. & Dahle, H. (2005) *Environ. Sci. Technol.* **39,** 602–611.
12. Caldeira, K., Akai, M., Brewer, P., Chen, B., Haugan, P., Iwama, T., Johnston, P., Kheshgi, H. Q., Li, T. O., Poertner, H., *et al.* (2005) in *IPCC 2005: IPCC Special Report on Carbon Dioxide Capture and Storage* (Cambridge Univ. Press, Cambridge, U.K.), pp. 279–307.
13. Sabine, C. L., Feely, R. A., Gruber, N., Key, R. M., Lee, K., Bullister, J. L., Wanninkhof, R., Wong, C. S., Wallace, D. W. R., Tilbrook, B., *et al.* (2004) *Science* **305,** 367–371.
14. Jain, A. K. & Cao, L. (2005) *Geophys. Res. Lett.* **32,** L09609.
15. Walker, J. C. G. (1985) *Origins Life* **116,** 117–127.
16. Anderson, S. & Newell, R. (2004) *Annu. Rev. Environ. Resour.* **29,** 102–142.
17. Fer, I. & Haugan, P. (2003) *Limnol. Oceanogr.* **48,** 872–883.
18. Koide, H., Shindo, Y., Tazaki, Y., Iijima, M., Ito, K., Kimura, N. & Omata, K. (1997) *Energy Convers. Manage.* **38,** 253–258.
19. Song, Y., Chen, B., Nishio, M. & Akai, M. (2005) *Energy* **30,** 2298–2307.
20. Diamond, L. & Akinfiev, N. (2003) *Fluid Phase Equilibria* **208,** 265–290.
21. Spinelli, G. A., Giambalvo, E. R. & Fisher, A. T. (2004) in *Hydrogeology of the Oceanic Lithosphere*, eds. Davis, E. E. & Elderfield, H. (Cambridge Univ. Press, Cambridge, U.K.), pp. 339–369.
22. Zhang, S. (1994) *J. Geophys. Res.* **99,** 741–760.
23. Pruess, K. & García, J. (2002) *Environ. Geol.* **42,** 282–295.
24. Pape, H., Clauser, C. & Iffland, J. (1999) *Geophysics* **64,** 1447–1460.
25. Enos, P. & Sawatsky, L. H. (1981) *J. Sediment. Petrol.* **51,** 961–985.
26. Lee, K. M., Lee, H., Lee, J. & Kang, J. M. (2002) *Geophys. Res. Lett.* **29,** 2034.
27. Bakker, R., Duessy, J. & Cathelineau, M. (1996) *Geochem. Cosmochem. Acta* **60,** 1657–1681.
28. Eberli, G. & Baechle, G. (2003) *Leading Edge* **22,** 654–660.
29. Koide, H. (1995) *Energy Convers. Manage.* **36,** 505–508.
30. Neild, D. & Began, A. (1999) *Convection in Porous Media* (Springer, New York).
31. Phillips, O. M. (1991) *Flow and Reactions in Permeable Rocks* (Cambridge Univ. Press, Cambridge, U.K.).
32. National Aeronautics and Space Administration (2002) *Shuttle Radar Tomography Mission* (National Aeronautics and Space Administration, Washington, DC).